SIDE VIEW

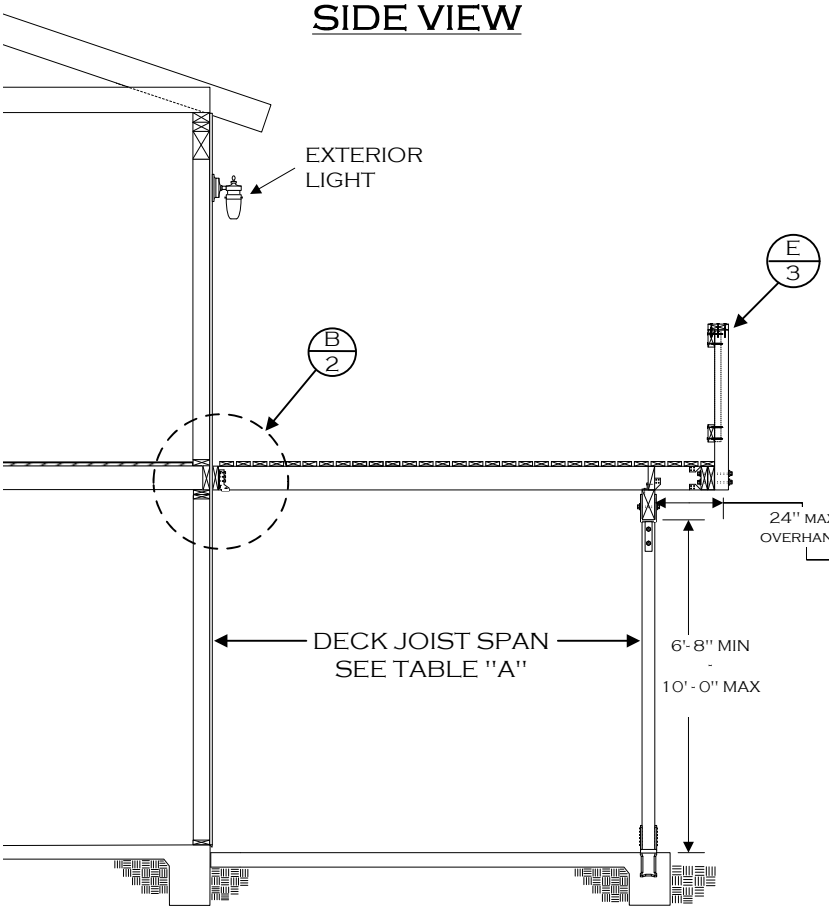

FRONT VIEW

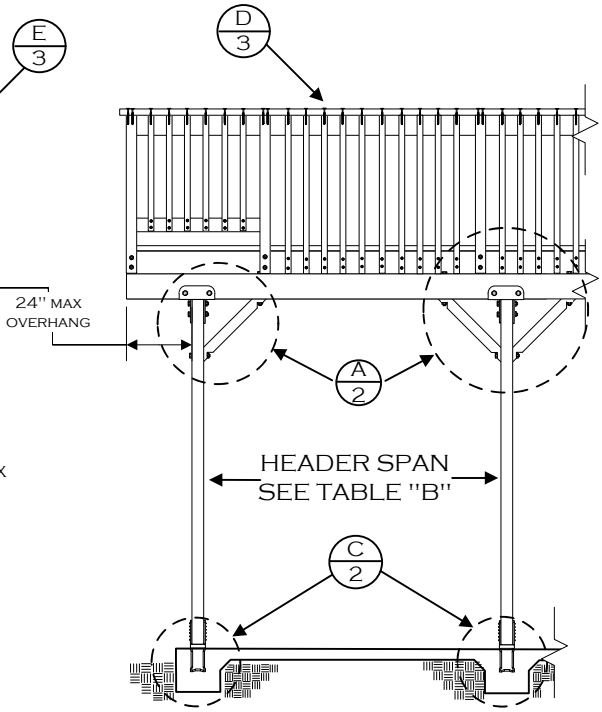

TABLE "A"
DECK JOIST SPANS
(DOUGLAS FIR #2 OR BETTER)

SIZE	SPACING	SPAN
2 x 6	12" o.c.	10' – 6"
	16" o.c.	9' – 0"
	24" o.c.	7' – 6"
2 x 8	12" o.c.	14' – 0"
	16" o.c.	12' – 0"
	24" o.c.	9' – 6"
2 x 10	16" o.c.	15' – 0"
	24" o.c.	12' – 0"
2 x 12	24" o.c.	14' – 0"
4 x 6	12" o.c.	14' – 6"
	16" o.c.	13' – 6"
	24" o.c.	11' – 6"
4 x 8	24" o.c.	15' – 0"
4 x 10	32" o.c.	15' – 0"

TABLE "B"
HEADER SIZING & SPANS
(DOUGLAS FIR #2 OR BETTER)

JOIST SPAN	HEADER	
	SIZE	SPAN
UPTO 8'-0"	4 X 8	8'-0"
	4 X 10	10'-0"
	4 X 12	11'-6"
	6 X 12	14'-0"
8'-1" - 10'-0"	4 X 8	7'-6"
	4 X 10	9'-6"
	4 X 12	11'-0"
	6 X 12	13'-0"
10'-1" - 12'-0"	4 X 8	7'-0"
	4 X 10	9'-0"
	4 X 12	10'-0"
	6 X 12	12'-0"
12'-1" - 15'-0"	4 X 8	6'-6"
	4 X 10	8'-0"
	4 X 12	9'-6"
	6 X 12	11'-0"

TABLE "C" △1
LEDGER BOLT SPACING
(3/8 DIA. X 6" LAG BOLTS – SEE NOTE 1)

DECK JOIST SPAN	SPACING
8'-0" OR LESS	8" O.C.
8'-1" TO 10'-0"	6" O.C.
10'-1" TO 12'-0"	5-1/2" O.C.
12'-1" TO 14'-0"	4-1/2" O.C.
14'-1" TO 15'-0"	4" O.C.

NOTES:

1. Ledger Bolts shall be 3/8" dia. x 6" long with 1/ 4" dia. pre drilled holes. Bolts are to be placed staggered.
2. All metal hardware & screws to be galvanized or of otherwise approved corrosion resistance
3. Maximum 5' joist span if 2nd floor is cantilevered at ledger.
4. Shear walls may not be modified unless structural calculations are submitted and approved by the Building Department
5. Use of this Standard is limited to R-3 occupancies (Single Family Dwellings and Duplex) △1

DISCLAIMER:

Alternate deck designs may be possible when provided with an engineered analysis. Use of this conventional standard design is at the user's risk and carries no implied or inferred guarantee against failure or defects.

Western Riverside County Code Uniformity Program

City of Lake Elsinore Building Department

BALCONY/DECK STANDARD

951-674-3124 Ext. 224
130 S. Main Street, Lake Elsinore, CA 92530
Fax: 951-471-1419

KNEE BRACE DETAIL (A)

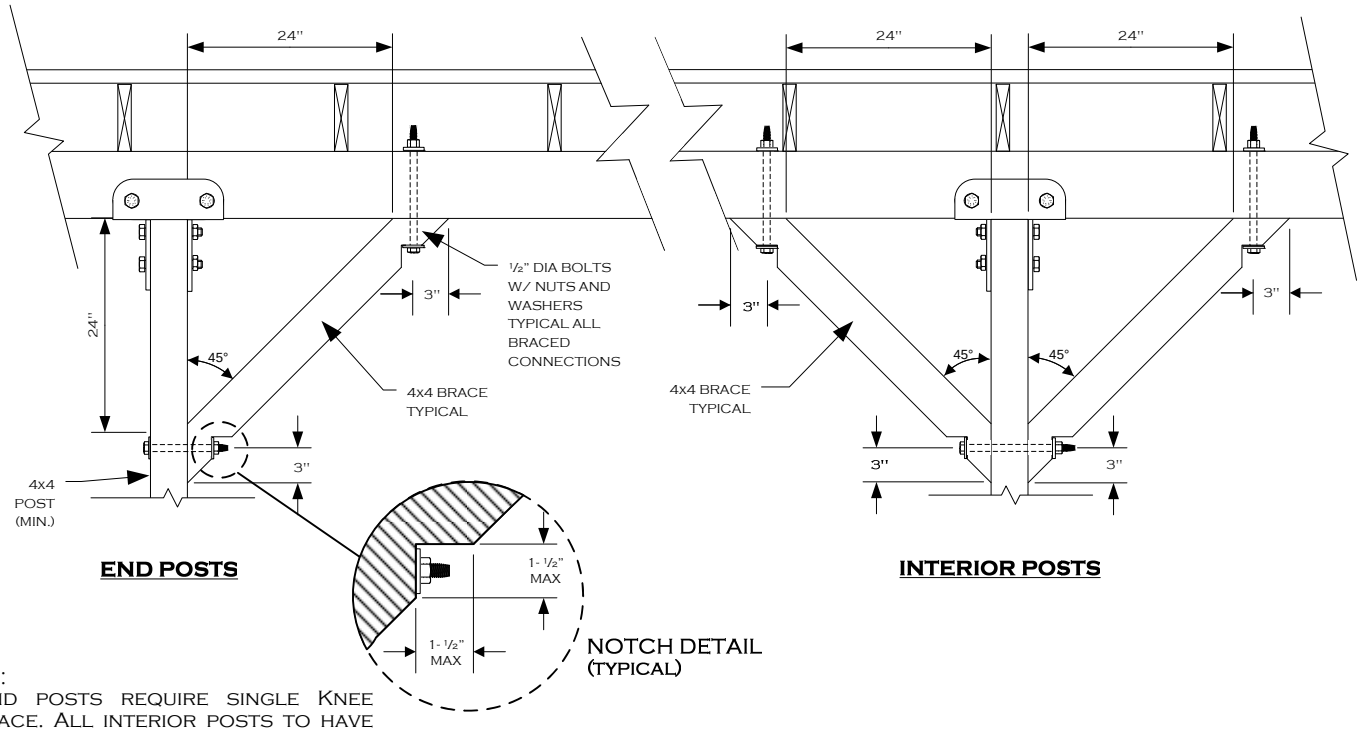

NOTE:
1. End posts require single Knee brace. All interior posts to have double braces.

Ledger detail (B)

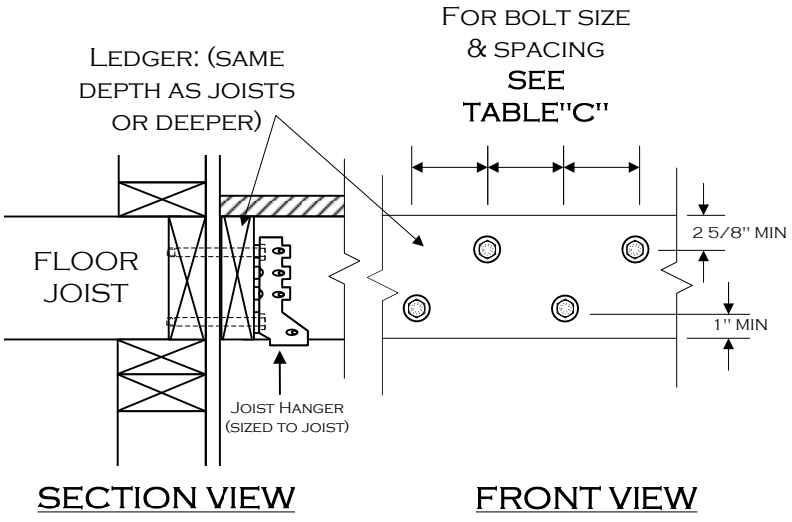

Footing Detail (C)

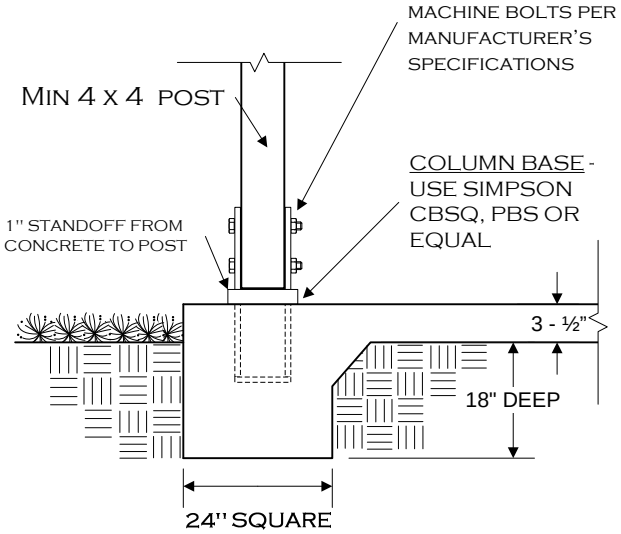

NOTE: This deck connection detail is based on the assumption that a minimum 1-1/2" thick wood member is adequately installed at all edges of the 2nd floor diaphragm. If any other material is used, such as TJI joists, a special engineered design will be required. It is the owner's responsibility to verify the presence of the appropriate rim joist.

Western Riverside County Code Uniformity Program			
City of Lake Elsinore Dream Extreme	City of Lake Elsinore Building Department		
	BALCONY/DECK STANDARD		
951-674-3124 Ext. 224	130 S. Main Street, Lake Elsinore, CA 92530		
Fax: 951-471-1419	1/1/2008 ⚠1	Deckstds2008.vsd	Page 2 of 4

Railing, Post, & Beam Detail (D)

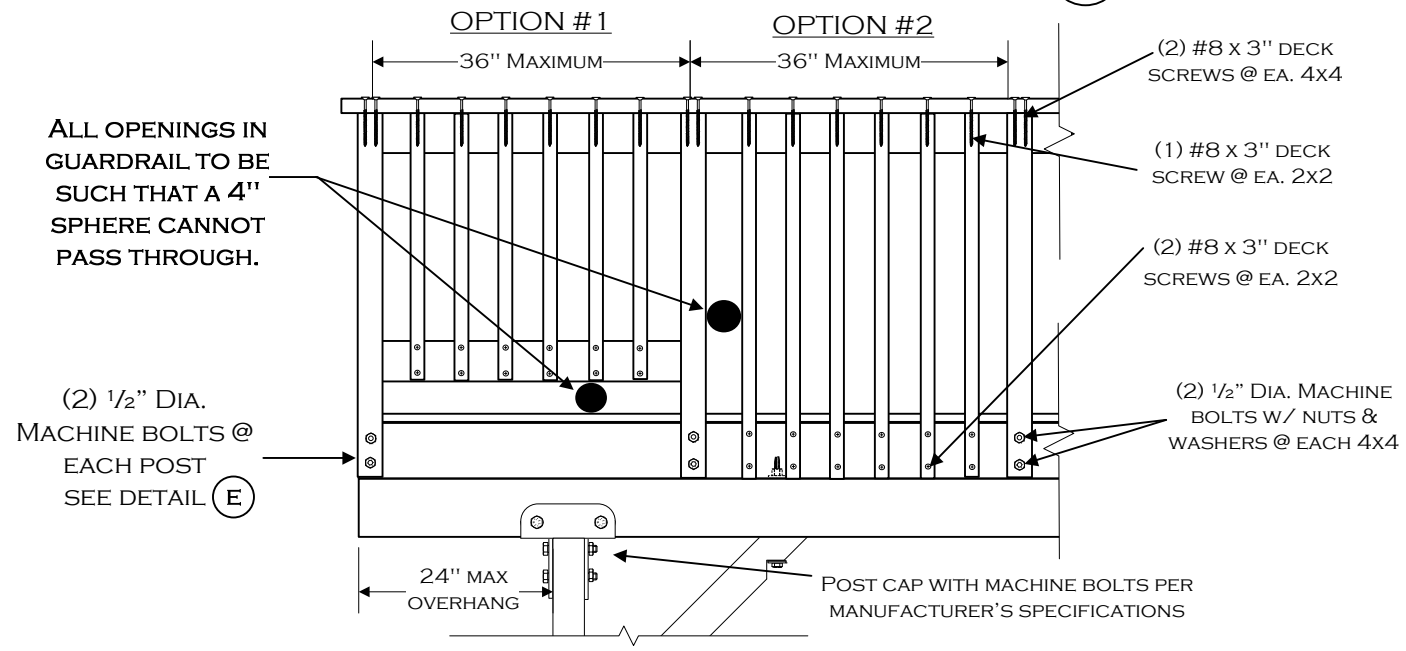

Railing Section Views (E)

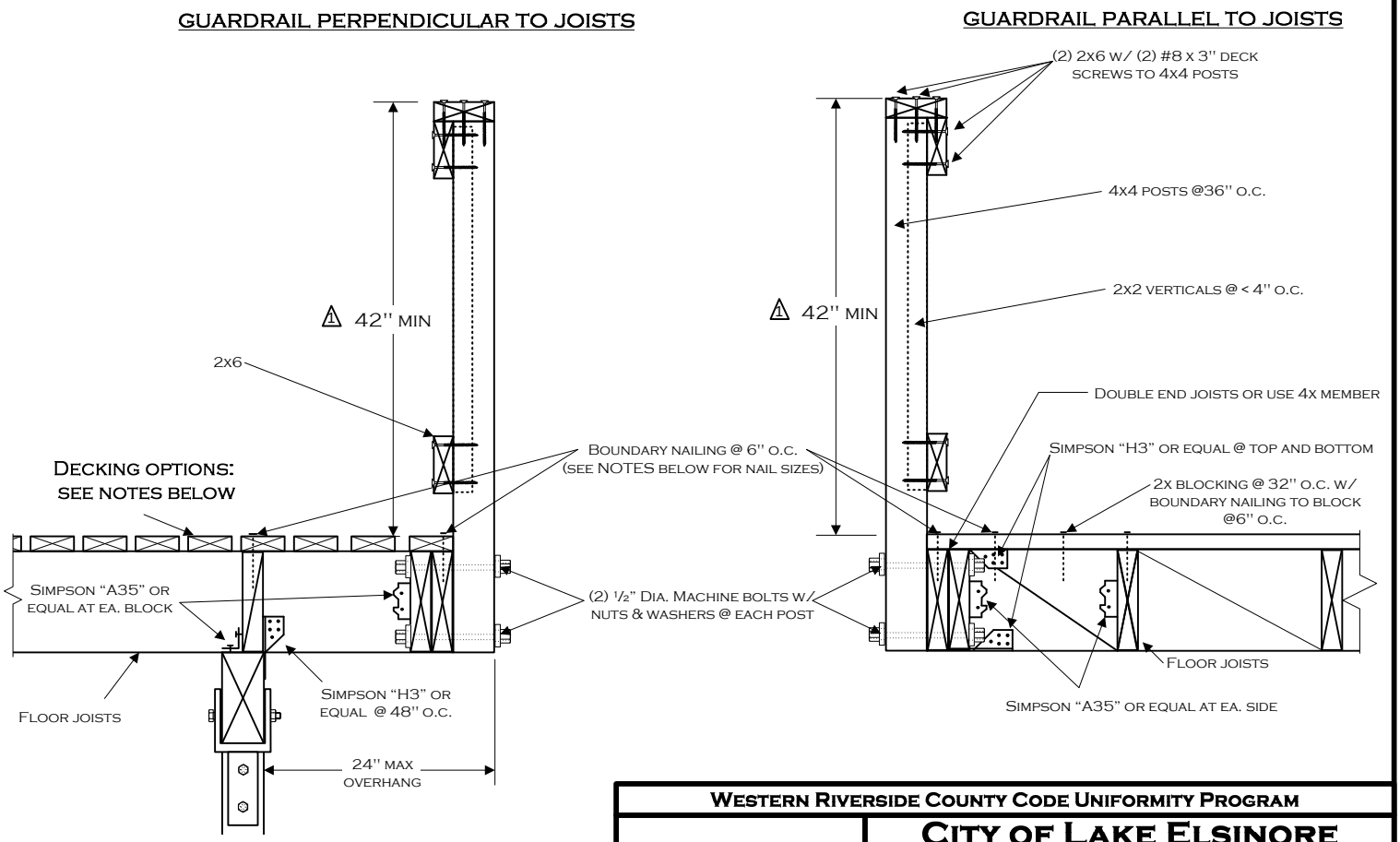

Note- decking options are as follows:

1. 5/8" tongue and groove jointed plywood secured with 8d nails. All edge nailing at 6" o.c. Must be covered with an approved weather resistive material walking surface, and sloped for drainage.
2. 2x6" decking secured w/ (2) 16d nails @ ea. joist.

Western Riverside County Code Uniformity Program			
City of Lake Elsinore Dream Extreme	City of Lake Elsinore Building Department		
	Balcony/Deck Standard		
951-674-3124 Ext. 224	130 S. Main Street, Lake Elsinore, CA 92530		
Fax: 951-471-1419	1/1/2008 1	Deckstds2008.vsd	Page 3 of 4

Optional exterior stairway

NOTES:

1. THE TOLERANCE BETWEEN THE LARGEST AND SMALLEST TREAD DEPTH OR BETWEEN THE LARGEST AND SMALLEST RISER HEIGHT SHALL NOT EXCEED 3/8" IN THE STAIRWAY. 1
2. STAIRWAY WIDTH 36" MIN – 48" MAX.
3. TREADS MUST HAVE APPROVED SLIP RESISTANT SURFACE
4. ALTERNATE STAIRWAY DESIGNS MAY BE ACCEPTABLE PENDING BUILDING DEPARTMENT APPROVAL.
5. LIGHTING LEVEL AT ALL STAIR TREADS TO BE A MINIMUM OF 1 FOOT-CANDLE. 1

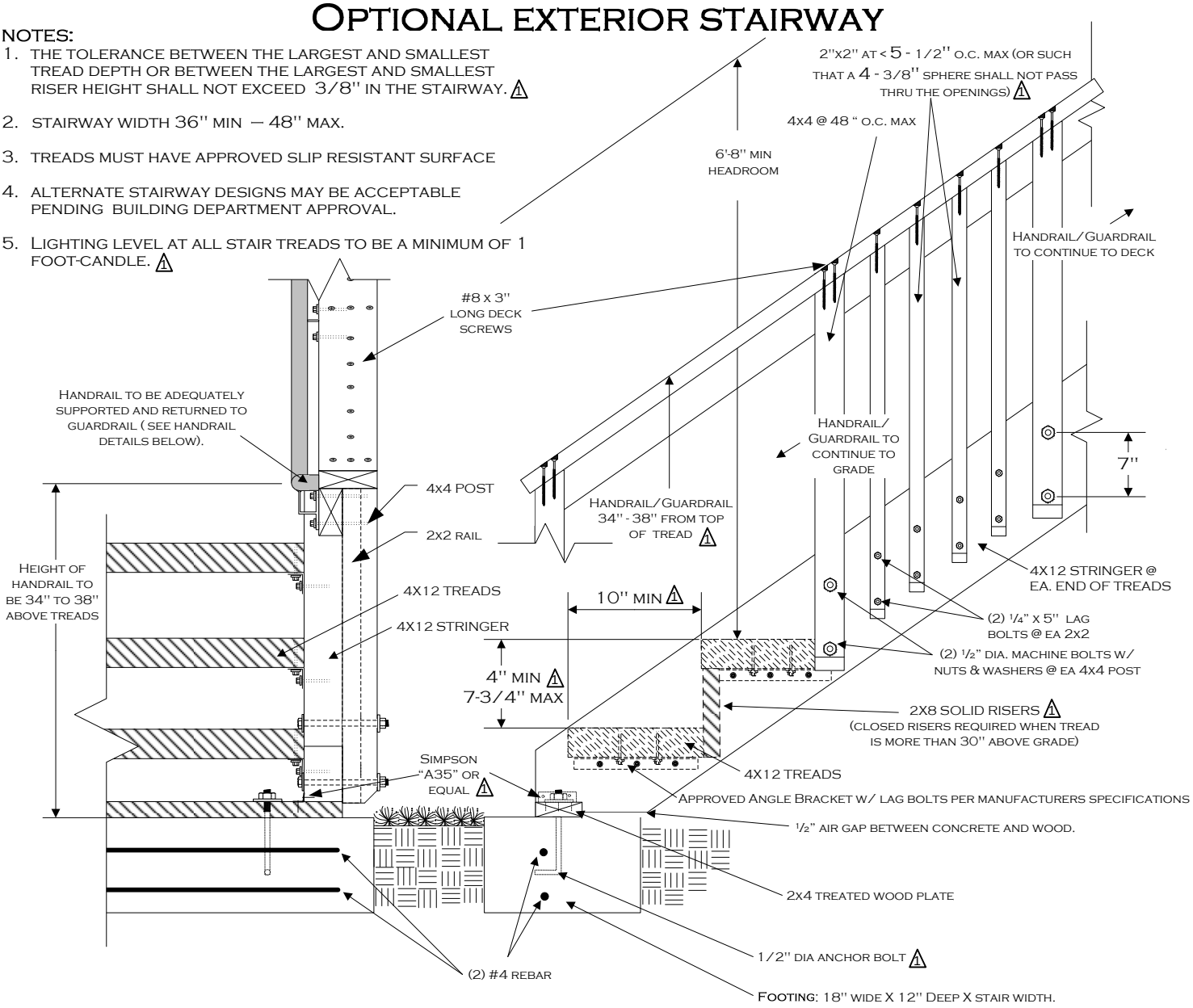

FRONT VIEW

SIDE VIEW

HANDRAIL DETAILS

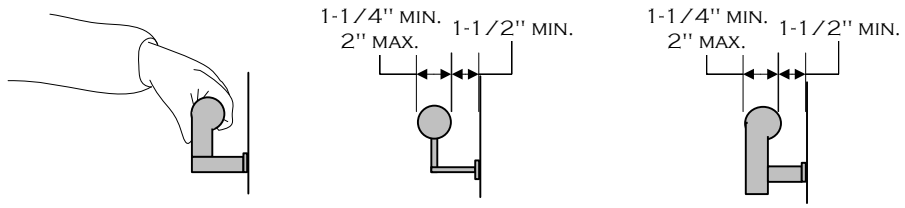

NOTE: OTHER SHAPES MAY BE ACCEPTABLE IF THEY PROVIDE AN EQUIVALENT GRIPPING SURFACE.

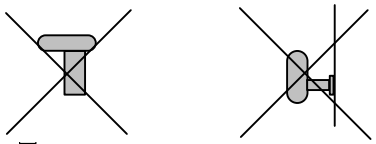

THESE DESIGNS ARE NOT ACCEPTABLE

WESTERN RIVERSIDE COUNTY CODE UNIFORMITY PROGRAM			
CITY OF LAKE ELSINORE DREAM EXTREME	CITY OF LAKE ELSINORE BUILDING DEPARTMENT		
	BALCONY/DECK STANDARD		
951-674-3124 EXT. 224	130 S. MAIN STREET, LAKE ELSINORE, CA 92530		
FAX: 951-471-1419	1/1/2008 1	DECKSTDS2008.VSD	PAGE 4 OF 4