CITY OF LAKE ELSINORE
STANDARD PLANS

SECTION 2:
Curbs, Gutters, and Sidewalks

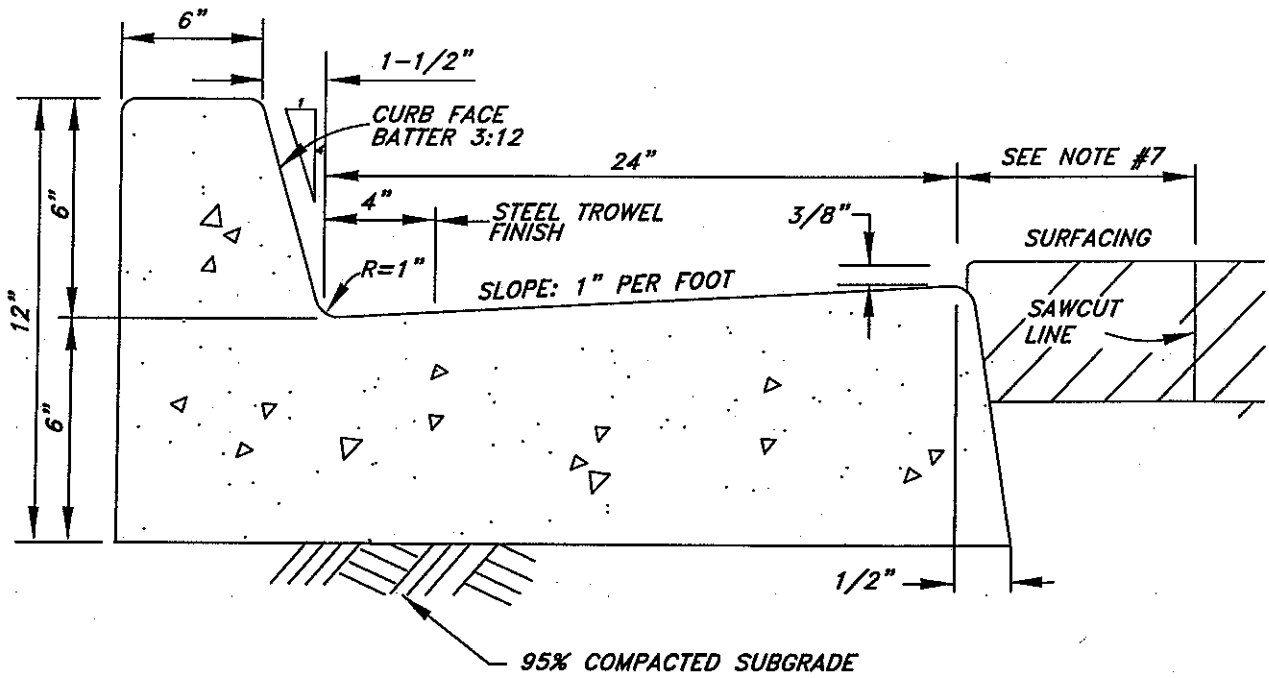

NOTES:

1.) CONCRETE SHALL BE CLASS 560-C-3250 P.C.C.; CURED WITH WHITE PIGMENTED CURING COMPOUND.

2.) ALL EXPOSED CORNERS SHALL BE FINISHED WITH 1/2" RADIUS.

3.) FINISH SHALL BE FINE BROOM.

4.) EXISTING P.C.C. SHALL BE SAWCUT AT WEAKENED PLANE JOINT PRIOR TO REMOVAL.

5.) CURBS SHALL HAVE WEAKENED PLANE JOINTS AT 10' INTERVALS; NO SCORELINES ALLOWED.

6.) WHEN CURB AND GUTTER IS PLACED BY AN EXTRUSION MACHINE, FINISHING WORK SHALL PROVIDE AN ACCEPTABLE FINISH AND WEAKENED PLANE JOINTS MAY BE SAWCUT.

7.) A MINIMUM 1' WIDE A.C. PAVEMENT REPAIR PATCH IS REQUIRED WHEN CURB AND GUTTER IS PLACED ADJACENT TO EXISTING A.C. PAVEMENT.

8.) MIN. PERMISSIBLE GRADE 1.0 % UNLESS APPROVED BY CITY ENGINEER

9.) SLOPE TOP OF CURB 1/4" PER FOOT TOWARD STREET

REVISION		ENGINEERING	DATE 07/09	CITY OF LAKE ELSINORE	
DATE	APPROVED	APPROVED BY		PREPARED BY PUBLIC WORKS	
		CITY ENGINEER	08/31/2009 DATE	TYPE 6 INTEGRAL CURB AND GUTTER	NO. 200

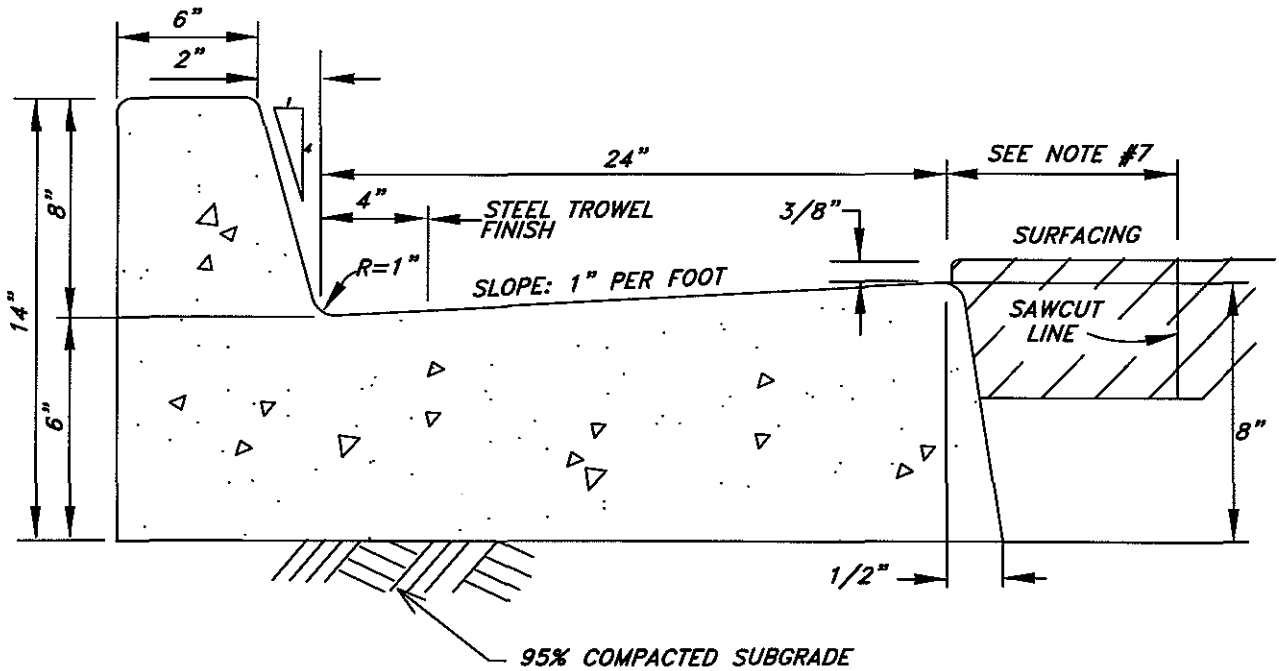

NOTES:

1.) CONCRETE SHALL BE CLASS 520-C-2500 P.C.C.; CURED WITH WHITE PIGMENTED CURING COMPOUND.

2.) ALL EXPOSED CORNERS SHALL BE FINISHED WITH 1/2" RADIUS.

3.) FINISH SHALL BE FINE BROOM.

4.) EXISTING P.C.C. SHALL BE SAWCUT AT WEAKENED PLANE JOINT PRIOR TO REMOVAL.

5.) CURBS SHALL HAVE WEAKENED PLANE JOINTS AT 10' INTERVALS; NO SCORELINES ALLOWED.

6.) WHEN CURB AND GUTTER IS PLACED BY AN EXTRUSION MACHINE, FINISHING WORK SHALL PROVIDE AN ACCEPTABLE FINISH AND WEAKENED PLANE JOINTS MAY BE SAWCUT.

7.) A MINIMUM 1' WIDE A.C. PAVEMENT REPAIR PATCH IS REQUIRED WHEN CURB AND GUTTER IS PLACED ADJACENT TO EXISTING A.C. PAVEMENT.

8.) MIN. PERMISSIBLE GRADE 1.0 % UNLESS APPROVED BY CITY ENGINEER

9.) SLOPE TOP OF CURB 1/4" PER FOOT TOWARD STREET

REVISION DATE	REVISION APPROVED	ENGINEERING	DATE 07/09	CITY OF LAKE ELSINORE PREPARED BY PUBLIC WORKS	
		APPROVED BY CITY ENGINEER	08/31/2009 DATE	TYPE 8 INTEGRAL CURB AND GUTTER	NO. 201

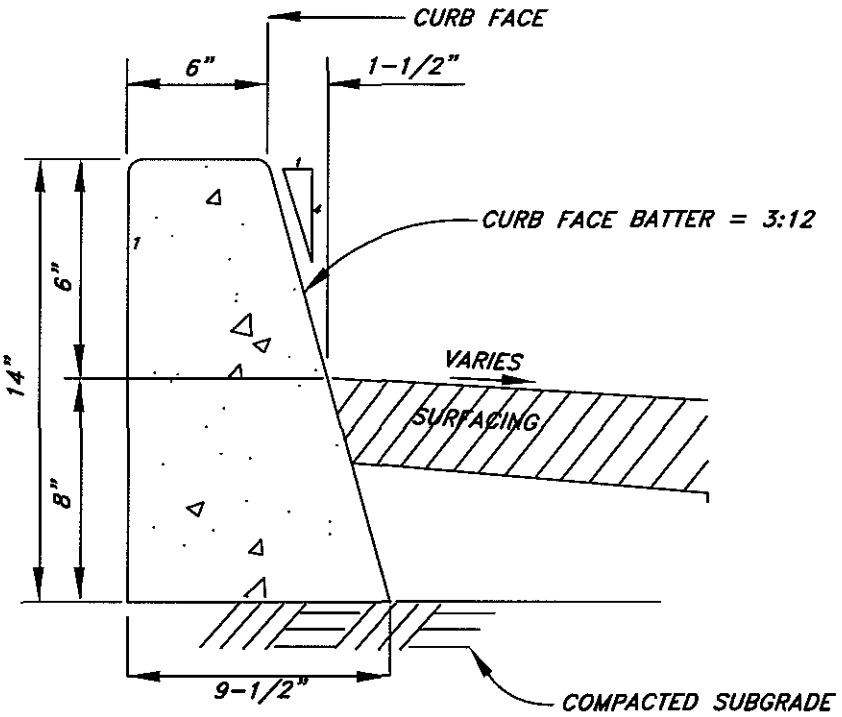

NOTES:

1.) CONCRETE SHALL BE CLASS 560-C-3250 P.C.C., CURED WITH WHITE PIGMENTED CURING COMPOUND.

2.) ALL EXPOSED CORNERS SHALL BE FINISHED WITH 1/2" RADIUS.

3.) FINISH SHALL BE FINE BROOM.

4.) EXISTING P.C.C. SHALL BE SAWCUT AT JOINT PRIOR TO REMOVAL.

5.) CURBS SHALL HAVE EXPANSION JOINTS AT B.C.R. AND E.C.R. AND WEAKENED PLANE JOINTS AT 10' INTERVALS ONLY.

6.) WHEN CURB AND GUTTER IS PLACED BY AN EXTRUSION MACHINE, FINISHING WORK SHALL PROVIDE AN ACCEPTABLE FINISH AND WEAKENED PLANE JOINTS MAY BE SAWCUT.

7.) SLOPE TOP OF CURB 1/4" PER FOOT TOWARD STREET

REVISION DATE	REVISION APPROVED	ENGINEERING DATE 07/09	CITY OF LAKE ELSINORE PREPARED BY PUBLIC WORKS	
		APPROVED BY CITY ENGINEER — DATE 08/31/2009	TYPE 6A CURB	NO. 202

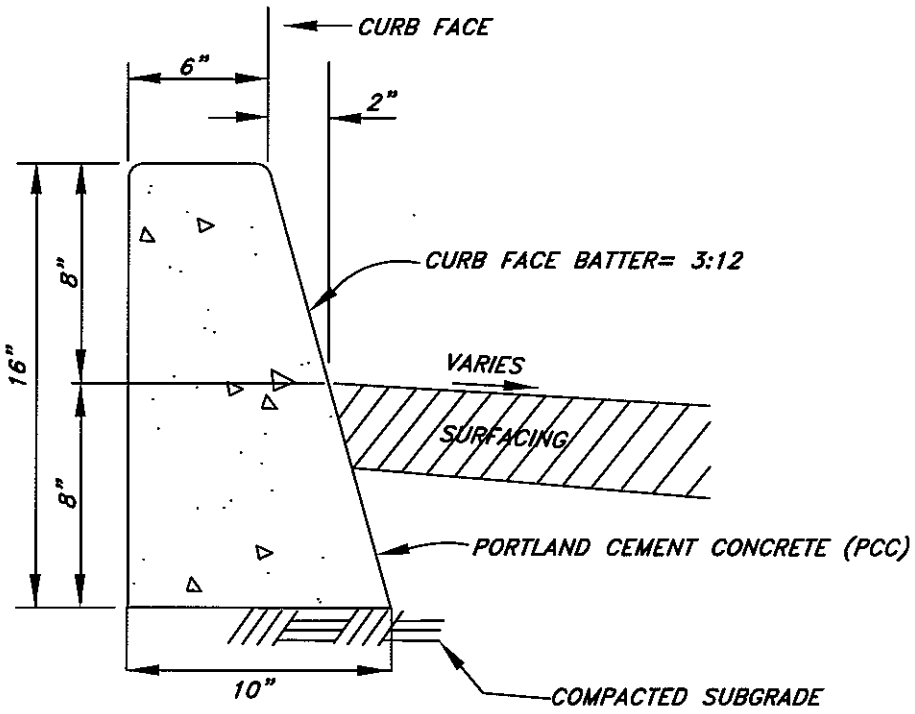

NOTES:

1.) CONCRETE SHALL BE CLASS 520-C-2500 P.C.C., CURED WITH WHITE PIGMENTED CURING COMPOUND.

2.) ALL EXPOSED CORNERS SHALL BE FINISHED WITH 1/2" RADIUS.

3.) FINISH SHALL BE FINE BROOM.

4.) EXISTING P.C.C. SHALL BE SAWCUT AT SCORELINE PRIOR TO REMOVAL.

5.) CURBS SHALL HAVE EXPANSION JOINTS AT B.C.R. AND E.C.R. AND WEAKENED PLANE JOINTS AT 10' INTERVALS ONLY.

6.) WHEN CURB AND GUTTER IS PLACED BY AN EXTRUSION MACHINE, FINISHING WORK SHALL PROVIDE AN ACCEPTABLE FINISH AND WEAKENED PLANE JOINTS MAY BE SAWCUT.

7.) SLOPE TOP OF CURB 1/4" PER FOOT TOWARD STREET

REVISION		ENGINEERING	DATE 07/09	CITY OF LAKE ELSINORE	
DATE	APPROVED	APPROVED BY		PREPARED BY PUBLIC WORKS	
		CITY ENGINEER	08/31/2009 DATE	TYPE 8A CURB	NO. 203

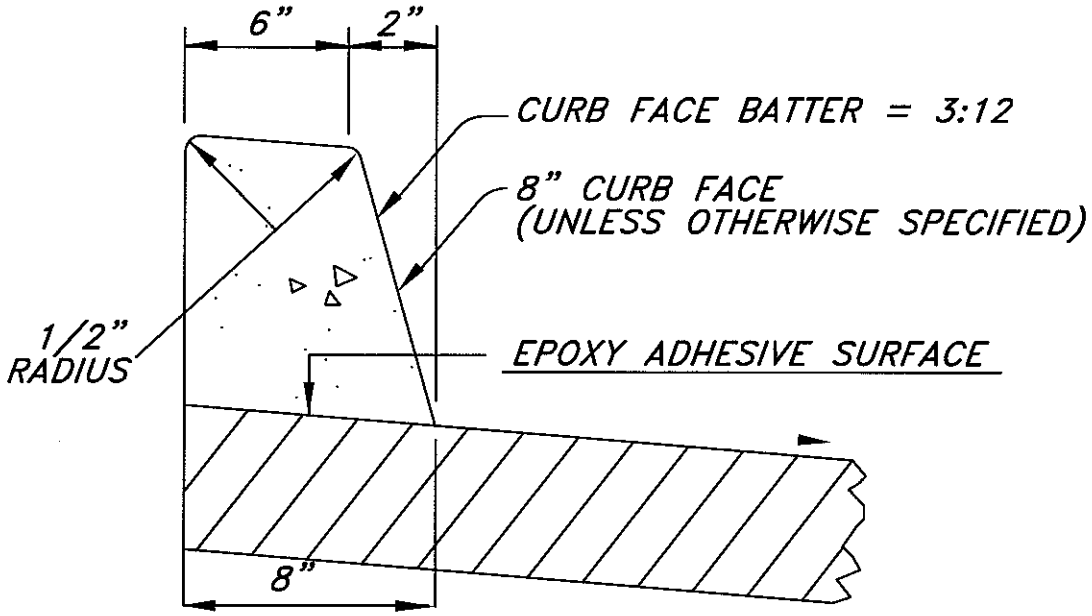

NOTES:

1.) CONCRETE SHALL BE CLASS 560-C-3250 P.C.C., CURED WITH WHITE PIGMENTED CURING COMPOUND.

2.) ALL EXPOSED CORNERS SHALL BE FINISHED WITH 1/2" RADIUS.

3.) FINISH SHALL BE FINE BROOM.

4.) EXISTING P.C.C. SHALL BE SAWCUT AT SCORELINE PRIOR TO REMOVAL.

5.) CURBS SHALL HAVE EXPANSION JOINTS AT B.C.R. AND E.C.R. AND WEAKENED PLANE JOINTS AT 10' INTERVALS ONLY.

6.) WHEN CURB AND GUTTER IS PLACED BY AN EXTRUSION MACHINE, FINISHING WORK SHALL PROVIDE AN ACCEPTABLE FINISH AND WEAKENED PLANE JOINTS MAY BE SAWCUT.

7.) SLOPE TOP OF CURB 1/4" PER FOOT TOWARD STREET

REVISION		ENGINEERING	DATE 07/09	CITY OF LAKE ELSINORE	
DATE	APPROVED	APPROVED BY		PREPARED BY PUBLIC WORKS	
		CITY ENGINEER	08/31/2009 DATE	TYPE D-1 CURB	NO. 204

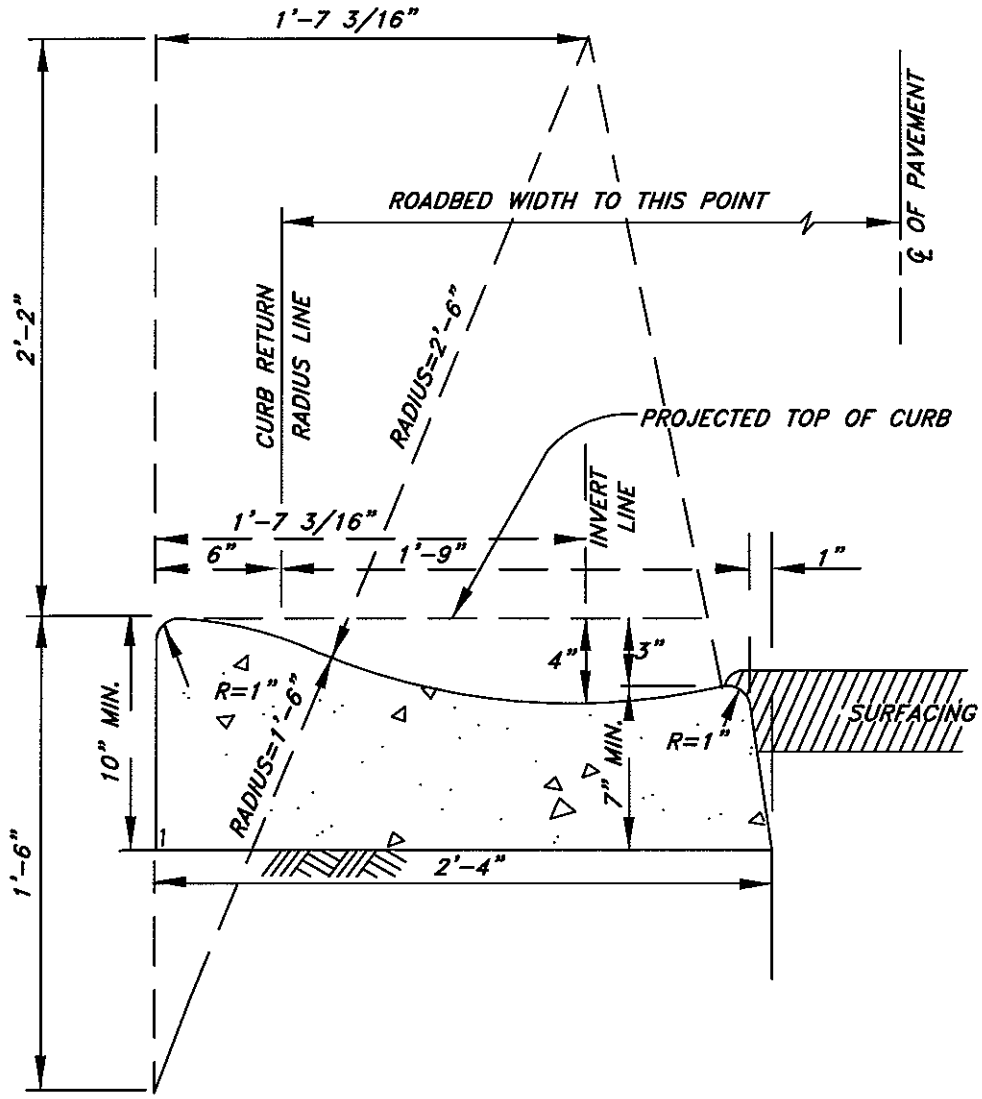

NOTES:

1.) CONCRETE SHALL BE CLASS 520-C-2500 P.C.C.; CURED WITH WHITE PIGMENTED CURING COMPOUND.

2.) ALL EXPOSED CORNERS SHALL BE FINISHED WITH 1/2" RADIUS.

3.) FINISH SHALL BE FINE BROOM.

4.) EXISTING P.C.C. SHALL BE SAWCUT AT SCORELINE PRIOR TO REMOVAL.

5.) CURBS SHALL HAVE EXPANSION JOINTS AT 60' INTERVALS, AND WEAKENED PLANE JOINTS AT 10' INTERVALS ONLY; NO SCORELINES ALLOWED.

6.) WHEN CURB AND GUTTER IS PLACED BY AN EXTRUSION MACHINE, FINISHING WORK SHALL PROVIDE AN ACCEPTABLE FINISH AND WEAKENED PLANE JOINTS MAY BE SAWCUT.

7.) MAY ONLY BE USED WITH THE APPROVAL OF THE CITY ENGINEER.

REVISION		ENGINEERING	DATE 07/09	CITY OF LAKE ELSINORE	
DATE	APPROVED	APPROVED BY		PREPARED BY PUBLIC WORKS	
		CITY ENGINEER	08/31/2009 DATE	TYPE C ROLLED CURB	NO. 205

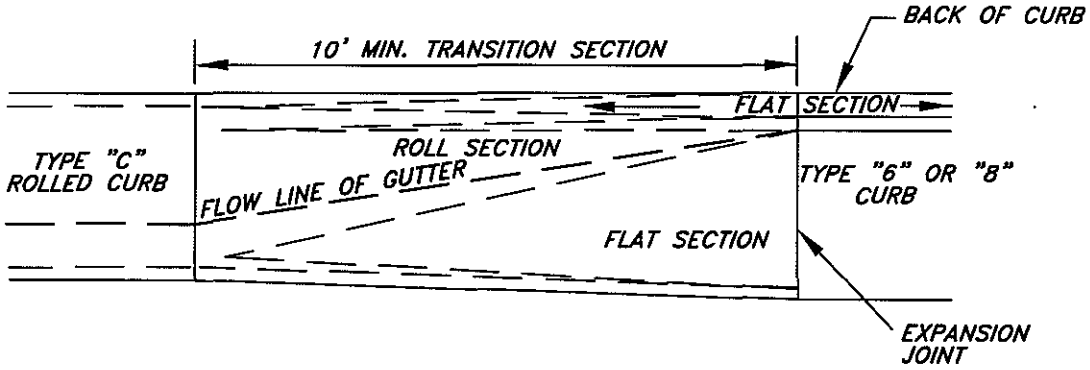

PLAN

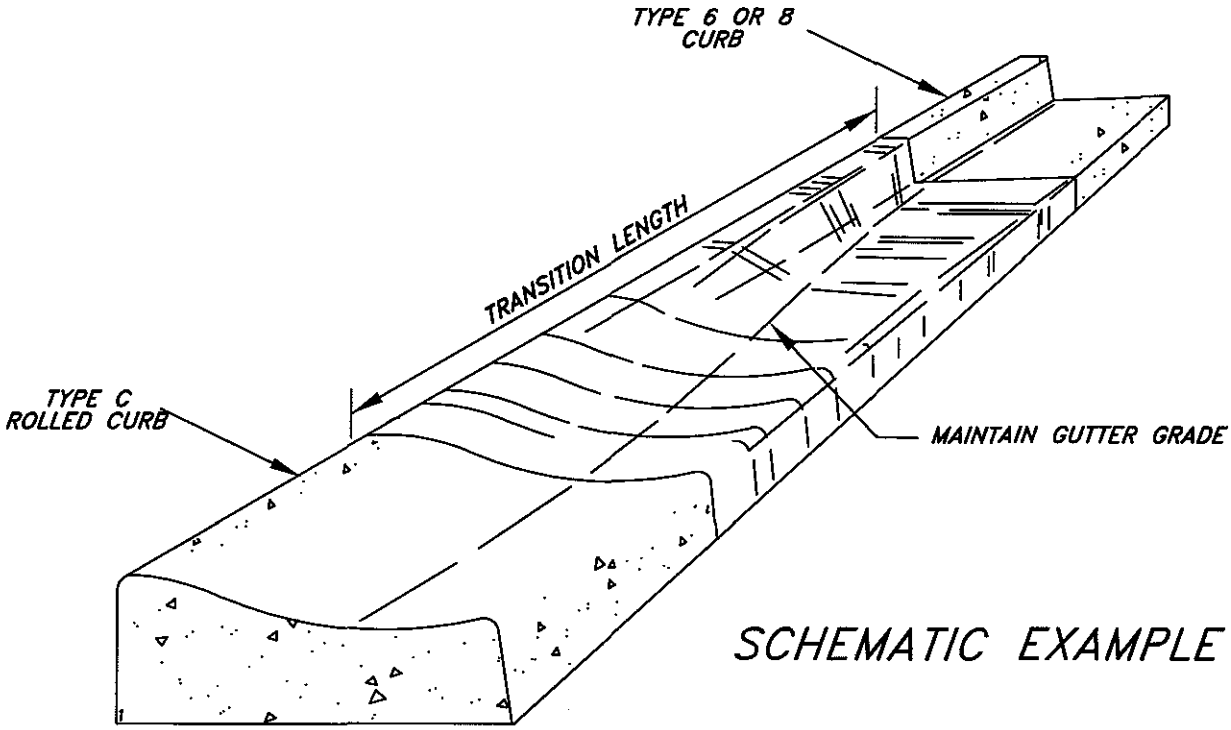

SCHEMATIC EXAMPLE

NOTE:

TO BE USED ONLY WHEN ROLLED CURB HAS BEEN APPROVED FOR USE BY THE CITY ENGINEER PRIOR TO DESIGN.

REVISION DATE	REVISION APPROVED	ENGINEERING	DATE 07/09	CITY OF LAKE ELSINORE PREPARED BY PUBLIC WORKS	
		APPROVED BY CITY ENGINEER	08/31/2009 DATE	CURB TRANSITION	NO. 206

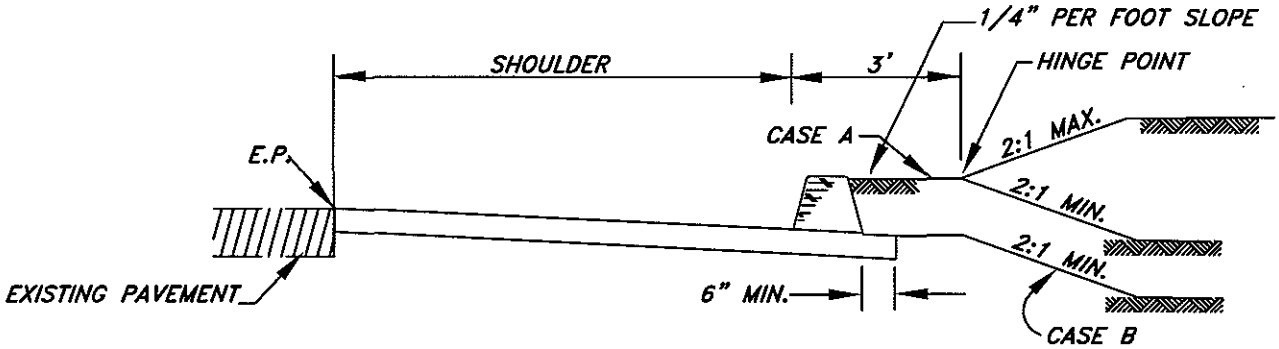

PAVED SHOULDER WITH AC DIKE

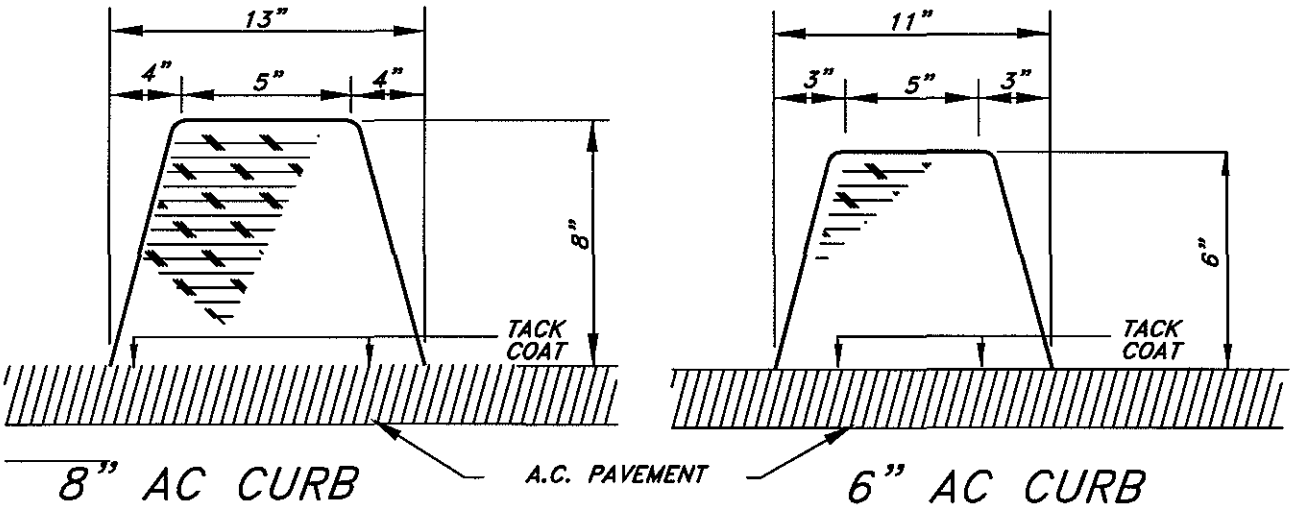

NOTES:

1.) THE ASPHALT CONCRETE MIXTURE SHALL BE TYPE III D-AR 8000 WITH A MINIMUM ASPHALT BINDER OF 5.8 PERCENT.

2.) PRIOR TO PLACEMENT, A TACK COAT SHALL BE APPLIED TO THE EXISTING SURFACE. TACK COAT SHALL BE AR1000 AT AN APPROXIMATE RATE OF 0.05 GALLON PER SQUARE YARD OR GRADE SS-1h EMULSIFIED ASPHALT AT AN APPROXIMATE RATE OF 0.05 TO 0.10 GALLON PER SQUARE YARD.

3.) THE TEMPERATURE OF THE MIX AT THE TIME OF PLACEMENT SHALL NOT BE LESS THAN 250° F OR MORE THAN 285° F.

4.) ALL EXTRUDERS AND SHOES SHALL BE APPROVED BY THE ENGINEER.

5.) USE CASE A BACKFILL UNLESS NOTED OTHERWISE

6.) A.C. CURB IS TO BE PLACED ON A MIN. OF 2" OF A.C. ROAD SURFACING, EXTENDING THROUGHOUT THE WIDTH OF A CURB.

REVISION DATE	REVISION APPROVED	ENGINEERING DATE 07/09	CITY OF LAKE ELSINORE PREPARED BY PUBLIC WORKS	
		APPROVED BY CITY ENGINEER — DATE 08/31/2009	ASPHALT CONCRETE CURB	NO. 207

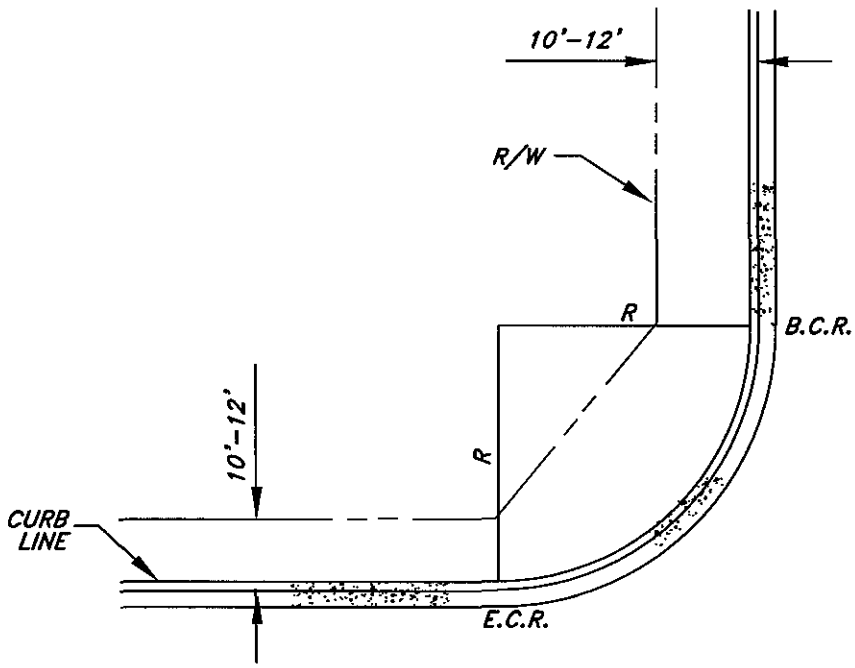

R = 25' IF INTERSECTING STREETS HAVE A WIDTH LESS THAN 64 FEET CURB TO CURB.

R = 35' IF EITHER INTERSECTING STREET IS AN INDUSTRIAL COLLECTOR STREET OR HAS A WIDTH EQUAL TO OR GREATER THAN 64' CURB TO CURB, EXCEPT IN CASES WHERE SPECIAL DESIGN EXISTS.

REVISION DATE	REVISION APPROVED	ENGINEERING DATE 07/09	CITY OF LAKE ELSINORE PREPARED BY PUBLIC WORKS	
		APPROVED BY CITY ENGINEER — DATE 08/31/2009	PROPERTY LINE: CORNER CUT-BACK, CURB RETURN RADIUS	NO. 208

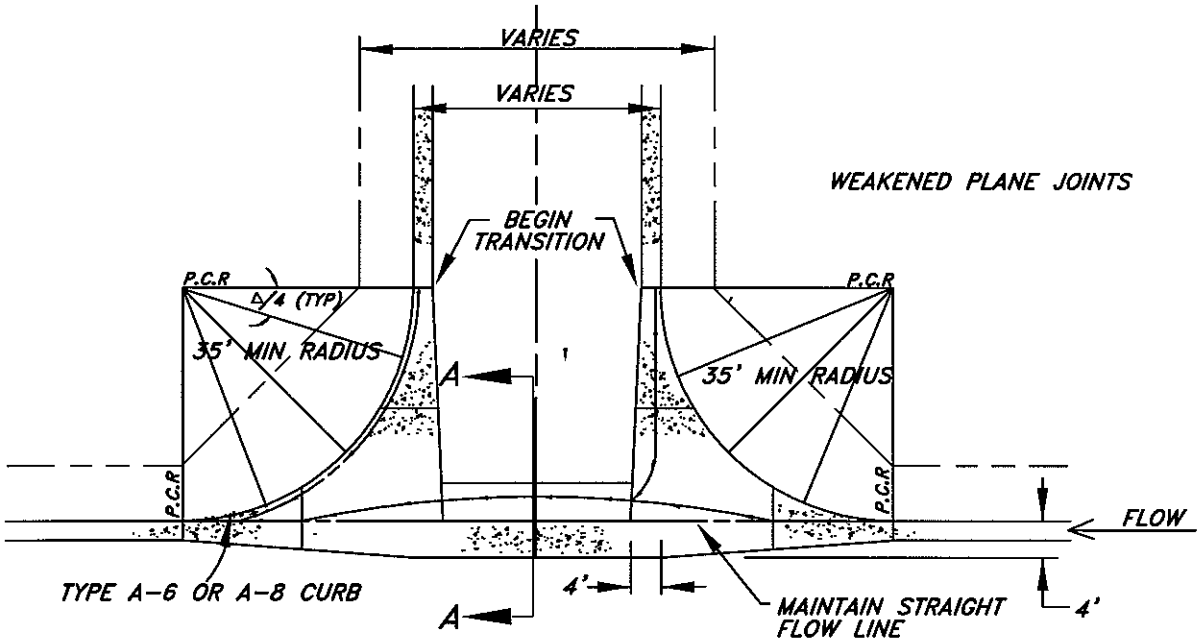

PLAN

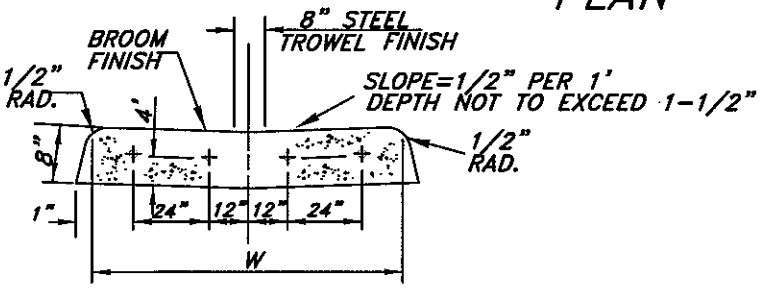

SECTION "A-A"
CROSS GUTTER

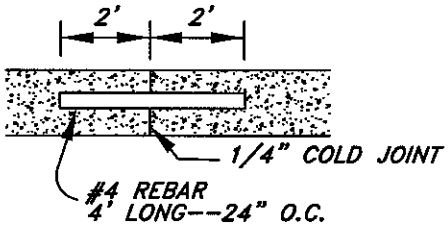

REBAR DETAIL

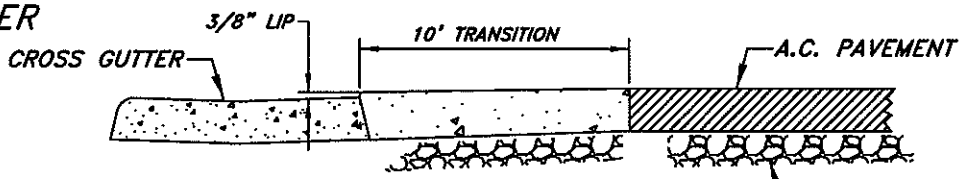

PAVING DETAIL

NOTES:

1.) ALL CONCRETE SHALL BE CLASS 560-C-3250, CURED WITH WHITE PIGMENTED CURING COMPOUND.
2.) DIMENSIONS MAY BE INCREASED DEPENDING ON DRAINAGE CONSIDERATIONS.
3.) 6" CLASS 2 AGGREGATE BASE SHALL BE PLACED AND COMPACTED TO 95% RELATIVE COMPACTION UNDER CROSS GUTTER AND SPANDRELS.
4.) SPANDREL WEAKENED PLANE JOINT LOCATIONS WILL BE DETERMINED BY ACCESS RAMP LOCATIONS.
5.) A MINIMUM 1' WIDE A.C. PAVEMENT REPAIR PATCH IS REQUIRED WHEN CROSS GUTTER IS PLACED ADJACENT TO EXISTING A.C. PAVEMENT.
6.) CURB BETWEEN P.R.C.'S SHALL BE CONSIDERED AS PART OF CROSS GUTTER

REVISION			
DATE	APPROVED	ENGINEERING DATE 07/09	CITY OF LAKE ELSINORE
		APPROVED BY	PREPARED BY PUBLIC WORKS
		CITY ENGINEER — DATE 08/31/2009	CROSS GUTTER LAYOUT — NO. 209

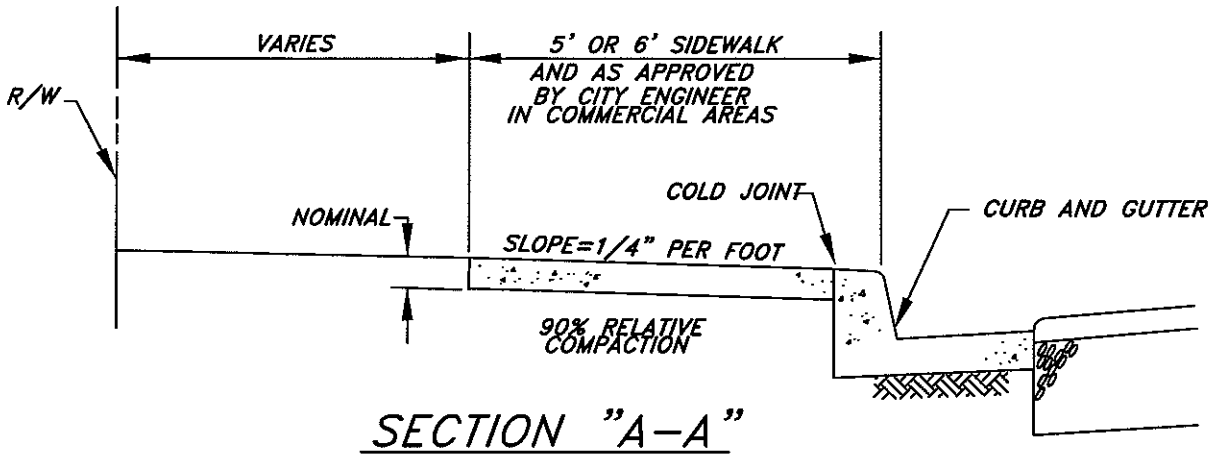

SECTION "A-A"

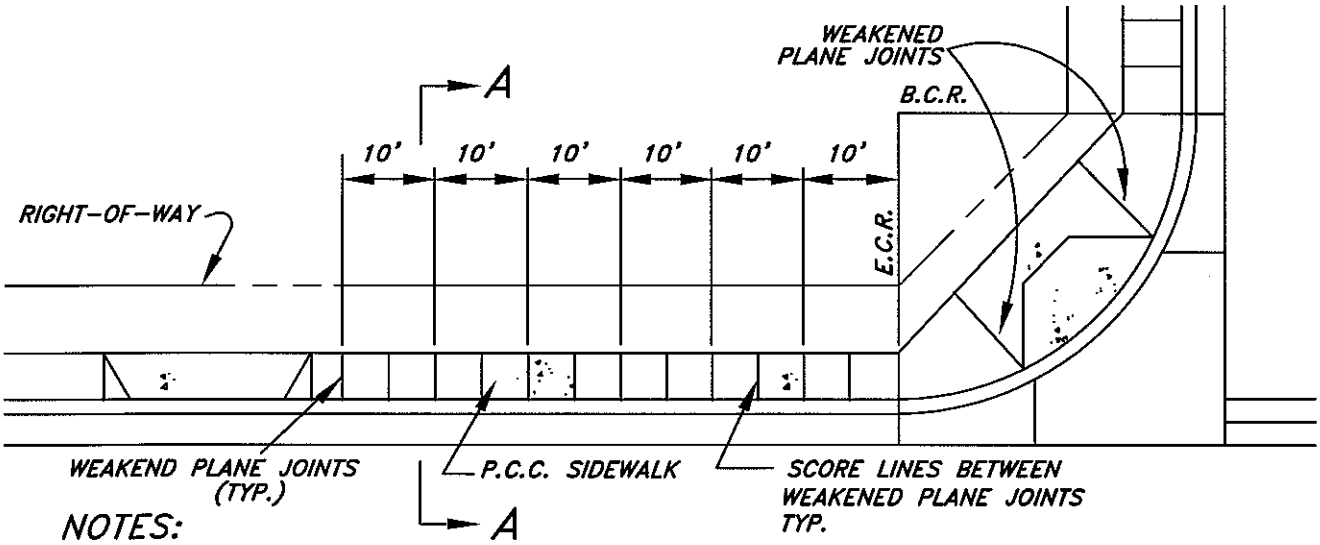

NOTES:

1.) THICKNESS OF SIDEWALK SHALL BE 4" EXCEPT IN DRIVEWAY APRONS, WHERE 6" IS REQUIRED FOR SINGLE FAMILY RESIDENTIAL DRIVEWAYS, AND 8" IS REQUIRED FOR ALL OTHERS.

2.) SIDEWALK SHALL HAVE 1-1/2" DEEP WEAKENED PLANE JOINTS AT INTERVALS SHOWN HEREON. JOINTS SHALL HAVE EDGES WITH 1/8" RADII.

3.) CONCRETE SHALL BE CLASS 520-C-2500, CURED WITH WHITE PIGMENTED CURING COMPOUND.

4.) 18" MOISTURE PENETRATION REQUIRED PRIOR TO PLACING CONCRETE IN SIDEWALK AREA (NON-EXPANSIVE SOIL AS DETERMINED BY SOILS TEST ARE EXEMPT AND REQUIRE ONLY SURFACE WETTING.)

5.) SIDEWALKS SHALL BE FORMED IN SUCH A MANNER AS TO MAINTAIN 48" MINIMUM OF UNOBSTRUCTED PEDESTRIAN WAY AT ALL LOCATIONS, INCLUDING BUT NOT LIMITED TO ELECTROLIERS, POWER POLES, AND FIRE HYDRANTS.

REVISION		ENGINEERING	DATE 07/09	CITY OF LAKE ELSINORE	
DATE	APPROVED	APPROVED BY		PREPARED BY PUBLIC WORKS	
		CITY ENGINEER	08/31/2009 DATE	CONTINGUOUS SIDEWALK	NO. 210

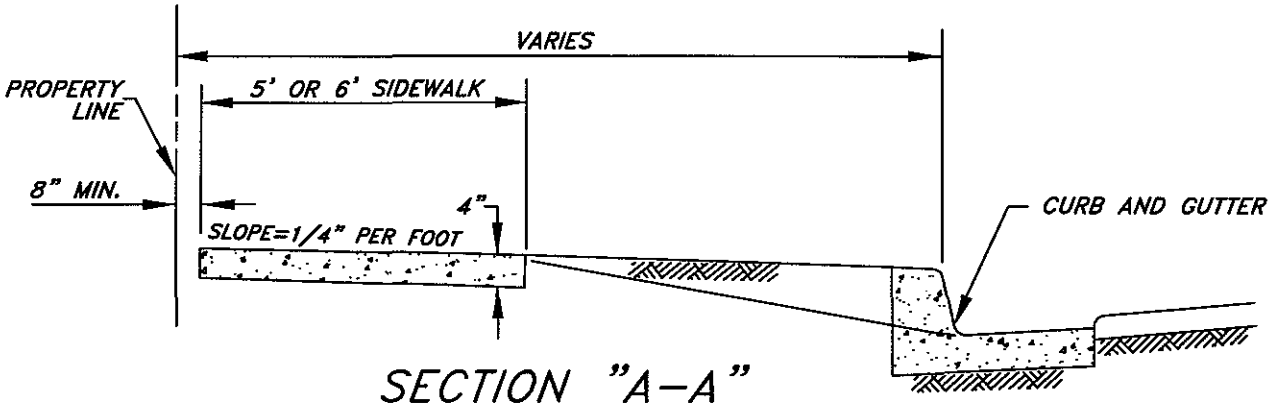

SECTION "A–A"

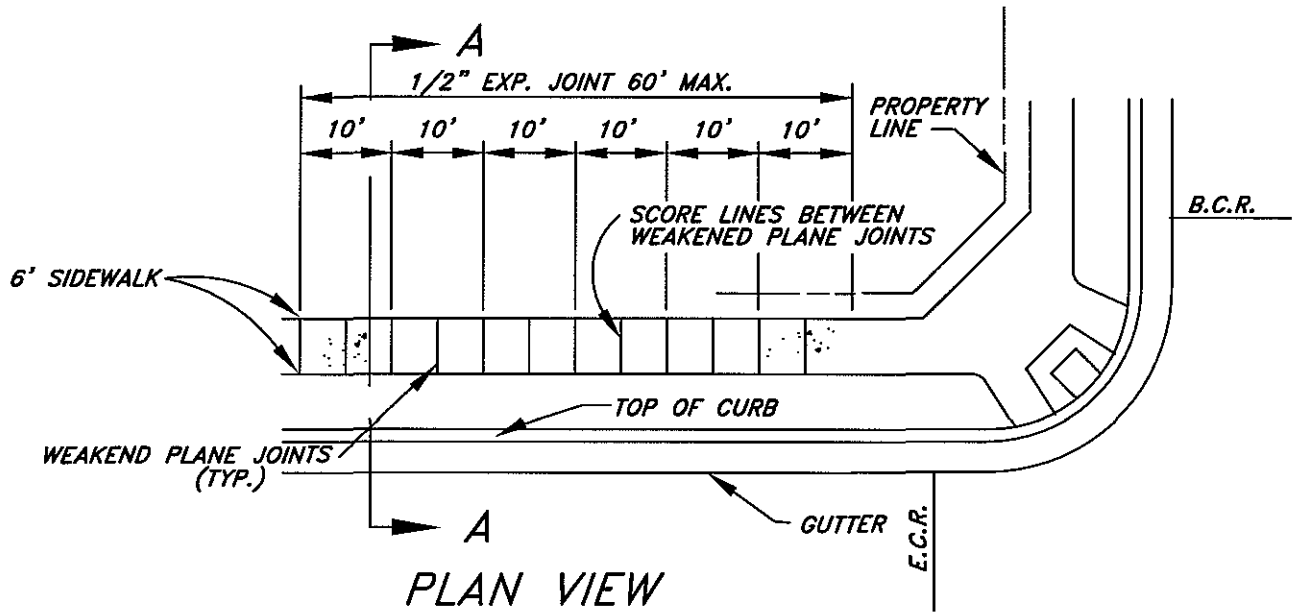

PLAN VIEW

NOTES:

1. THICKNESS OF SIDEWALK SHALL BE 4" EXCEPT IN DRIVEWAY APRONS WHERE 6" IS REQUIRED FOR RESIDENTIAL DRIVEWAYS AND 8" IS REQUIRED FOR COMMERCIAL DRIVEWAYS.
2. SIDEWALK SHALL HAVE 1/2" PREMOLDED EXPANSION JOINTS AND 1-1/2" DEEP WEAKENED PLANE JOINTS AT INTERVALS SHOWN HEREON. JOINTS SHALL HAVE EDGES WITH 1/8" RADII.
3. CONCRETE SHALL BE CLASS 520-C-3250, CURE WITH WHITE PIGMENTED CURING COMPOUND.
4. 18" MOISTURE PENETRATION REQUIRED PRIOR TO PLACING CONCRETE IN SIDEWALK AREA (NON-EXPANSIVE SOIL AS DETERMINED BY SOILS TEST ARE EXEMPT AND REQUIRE ONLY SURFACE WETTING.)
5. PARKWAY FROM CURB TO PROPERTY LINE TO BE BROUGHT TO GRADE BY CONTRACTOR BEFORE FINAL APPROVAL.
6. SIDEWALKS SHALL BE FORMED IN SUCH A MANNER AS TO MAINTAIN 48" MINIMUM OF UNOBSTRUCTED PEDESTRIAN WAY AT ALL LOCATIONS, INCLUDING BUT NOT LIMITED TO ELECTROLIERS, POWER POLES, AND FIRE HYDRANTS.

REVISION		ENGINEERING	DATE 07/09	CITY OF LAKE ELSINORE	
DATE	APPROVED	APPROVED BY		PREPARED BY PUBLIC WORKS	
		CITY ENGINEER	08/31/2009 DATE	NON-CONTINGUOUS SIDEWALK	NO. 211

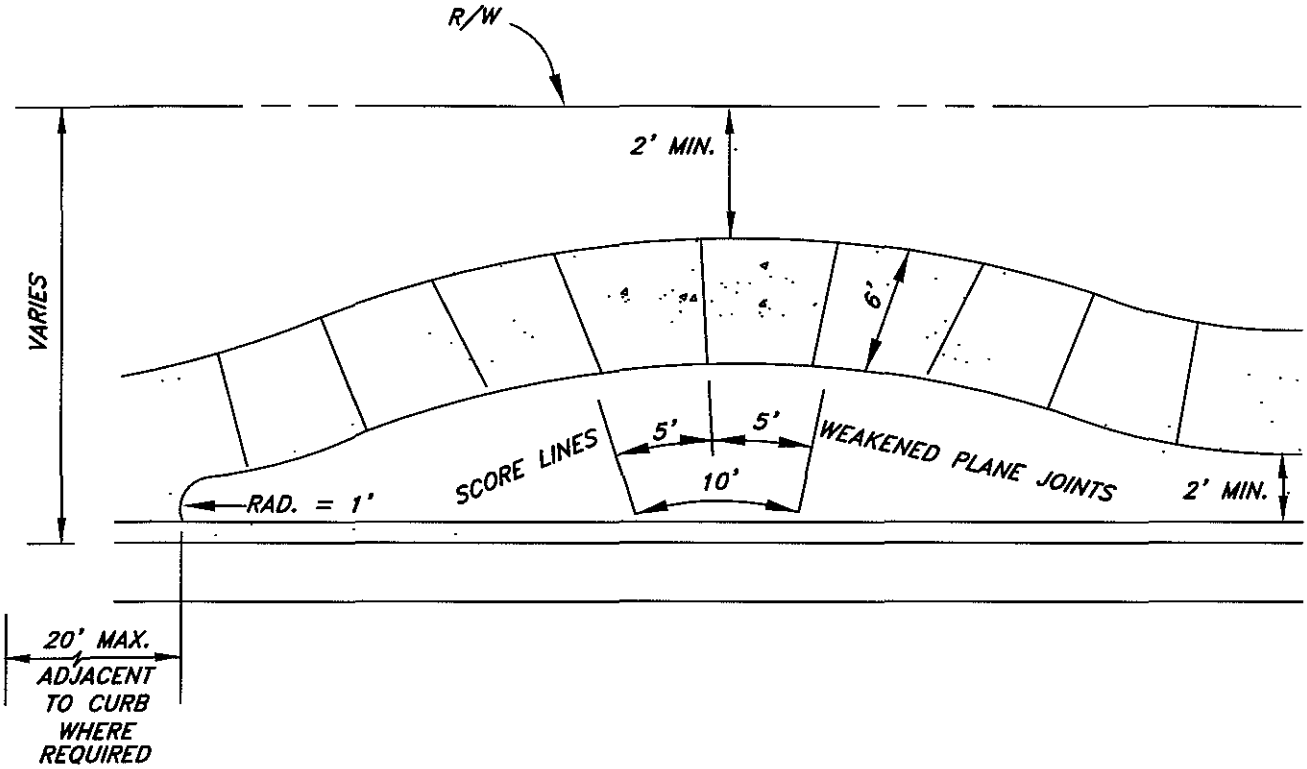

SIDEWALK SHALL MEANDER AS DETERMINED BY THE CITY ENGINEER

NOTES:

1. THICKNESS OF SIDEWALK SHALL BE 4" EXCEPT IN DRIVEWAY APRONS WHERE 6" IS REQUIRED FOR RESIDENTIAL DRIVEWAYS AND 8" IS REQUIRED FOR COMMERCIAL DRIVEWAYS.
2. SIDEWALK SHALL HAVE 1/2" PREMOLDED EXPANSION JOINTS AND 1-1/2" DEEP WEAKENED PLANE JOINTS AT INTERVALS SHOWN HEREON. JOINTS SHALL HAVE EDGES WITH 1/8" RADII.
3. CONCRETE SHALL BE CLASS 520-C-2500, CURED WITH WHITE PIGMENT CURING COMPOUND
4. 18" MOISTURE PENETRATION REQUIRED PRIOR TO PLACING CONCRETE IN SIDEWALK AREA (NON-EXPANSIVE SOIL AS DETERMINED BY SOILS TEST ARE EXEMPT AND REQUIRE ONLY SURFACE WETTING.)
5. PARKWAY FROM CURB TO PROPERTY LINE TO BE BROUGHT TO GRADE BY CONTRACTOR BEFORE FINAL APPROVAL.
6. SIDEWALKS SHALL BE FORMED IN SUCH A MANNER AS TO MAINTAIN 48" MINIMUM OF UNOBSTRUCTED PEDESTRIAN WAY AT ALL LOCATIONS, INCLUDING BUT NOT LIMITED TO ELECTROLIERS, POWER POLES, AND FIRE HYDRANTS.

REVISION DATE	REVISION APPROVED	ENGINEERING DATE 07/09	CITY OF LAKE ELSINORE PREPARED BY PUBLIC WORKS	
		APPROVED BY CITY ENGINEER — DATE 08/31/2009	MEANDERING SIDEWALK	NO. 212

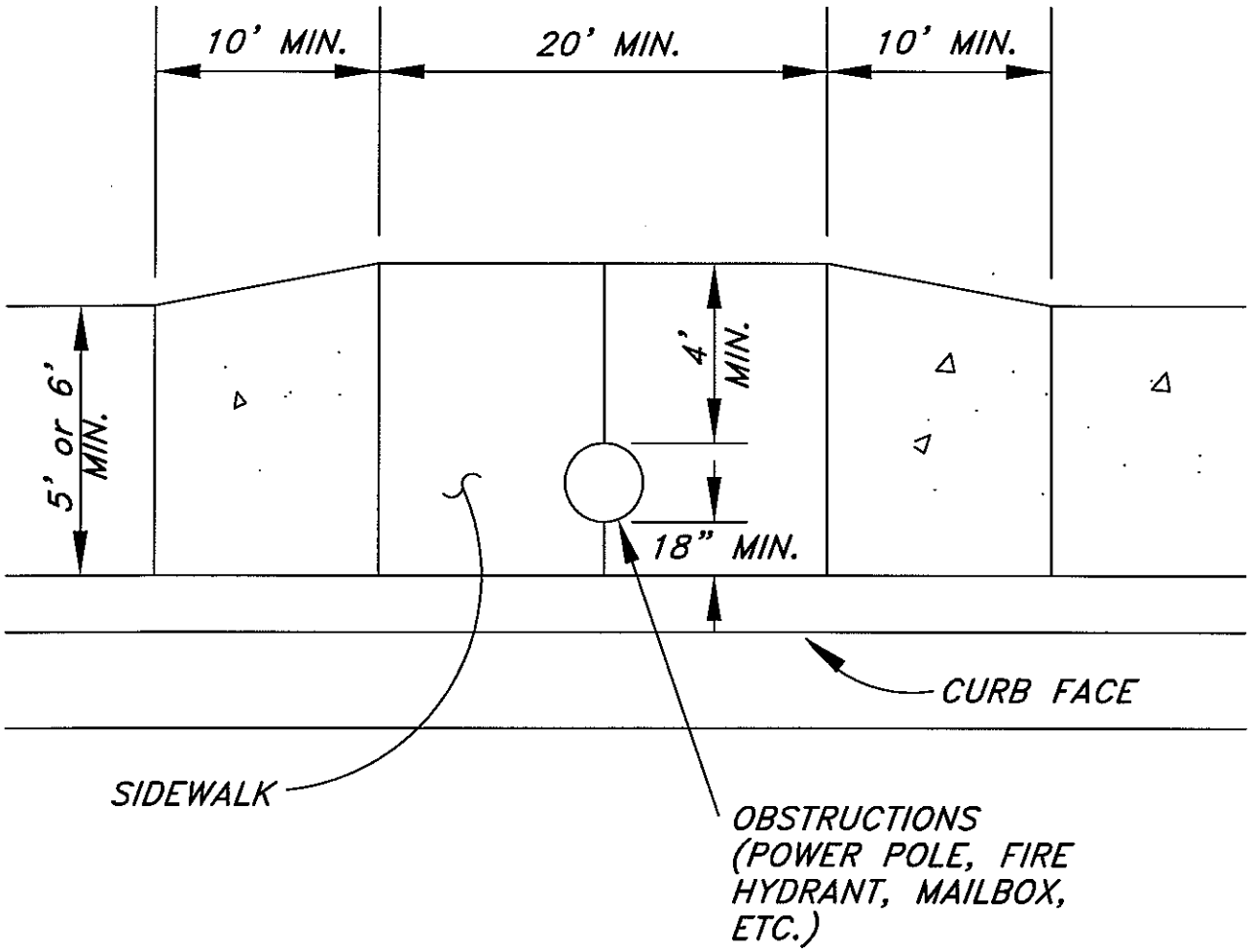

SIDEWALK SHALL BE WIDENED TO MINIMUM 5' OR 6' CLEARANCE FOR A MINIMUM LENGTH OF 10'.

REVISION DATE	REVISION APPROVED	ENGINEERING DATE 07/09	CITY OF LAKE ELSINORE PREPARED BY PUBLIC WORKS	
		APPROVED BY CITY ENGINEER 08/31/2009 DATE	SIDEWALK PLACEMENT AROUND OBSTRUCTIONS	NO. 213

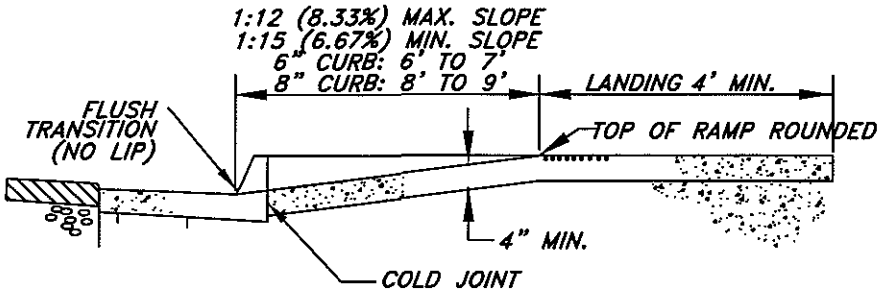

SECTION "A-A"

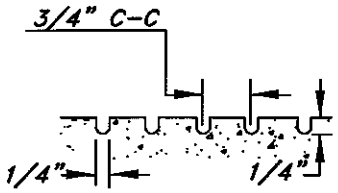

GROOVING DETAIL

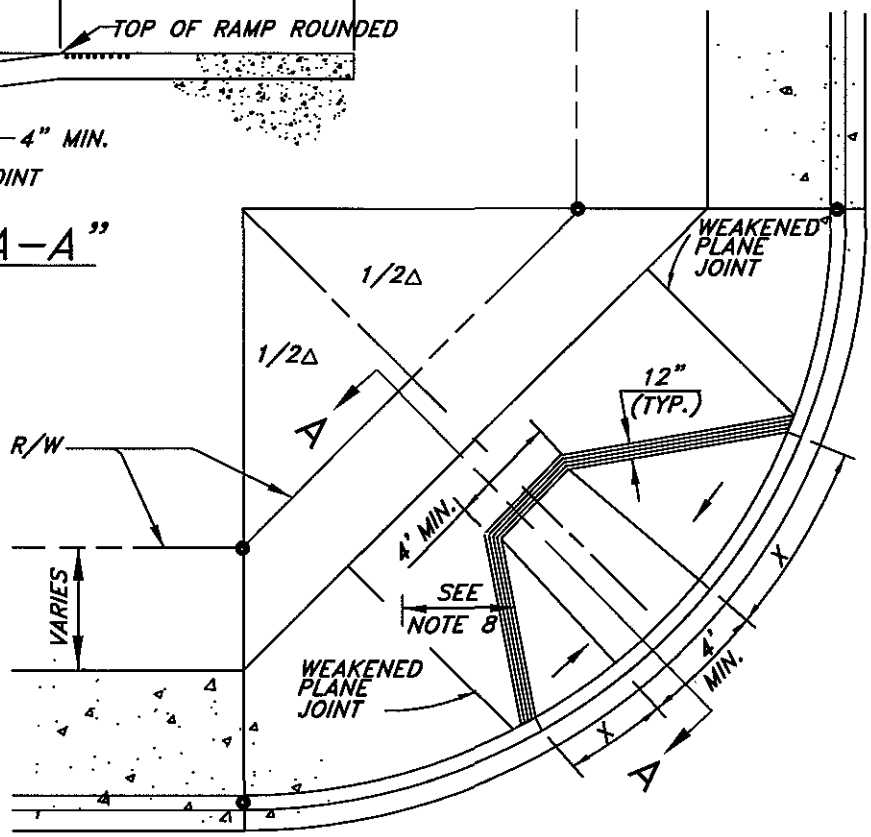

NOTES:

1.) ALL ACCESS RAMPS SHALL BE CONSTRUCTED TO THE MOST CURRENT REQUIREMENTS OF THE AMERICANS WITH DISABILITIES ACT (ADA) STANDARDS/CALIFORNIA CODE OF REGULATIONS TITLE 24-ACCESSIBILITY REGULATIONS. ADJUSTMENTS SHALL BE MADE IN THE FIELD TO ACHIEVE RAMP CONDITIONS.

2.) CONCRETE SHALL BE CLASS 520-C-2500, CURED WITH WHITE PIGMENTED CURING COMPOUND.

3.) A LEVEL 4' MINIMUM DEPTH LANDING IS REQUIRED AT THE TOP OF THE RAMP OVER THE ENTIRE RAMP WIDTH. CROSS SLOPE OF LANDING MAY NOT EXCEED 1:50 (2.0%).

4.) X SHALL HAVE A MAXIMUM SLOPE OF 1:10 (10%) (6" CURB X=5', 8" CURB X=7'-8").
IF THE LANDING IS LESS THAN 4', X SHALL HAVE A MAXIMUM SLOPE OF 1:12 (8.33%).

5.) GROOVED BORDER SHALL BE 12" WIDE ALONG THE TOP AND SIDES OF THE RAMP AT THE LEVEL SURFACE OF THE SIDEWALK. OMIT GROOVES ADJACENT TO NON-PAVED AREAS.

6.) RAMP SURFACE AND FLARED SIDES SHALL BE SLIP-RESISTANT AND SHALL BE OF CONTRASTING FINISH FROM ADJACENT SIDEWALK (MEDIUM BROOM FINISH OR EQUIVALENT).

7.) SEE STANDARD PLAN 411 FOR CROSSWALK DETAIL.

8.) THE SLOPES OF THE ROAD, GUTTER, OR ACCESSIBLE ROUTE ADJOINING THE CURB RAMP SHALL NOT EXCEED 1:20 (5%) WITHIN 4' OF THE TOP AND BOTTOM OF THE RAMP.

9.) DIMENSIONS SHOWN FOR SLOPING PORTIONS OF RAMP MAY VARY DUE TO FIELD CONDITIONS.

REVISION DATE	REVISION APPROVED	ENGINEERING DATE 07/09	CITY OF LAKE ELSINORE PREPARED BY PUBLIC WORKS	
		APPROVED BY CITY ENGINEER — DATE 08/31/2009	ACCESS RAMP: TYPE I	1 OF 3 NO. 214A

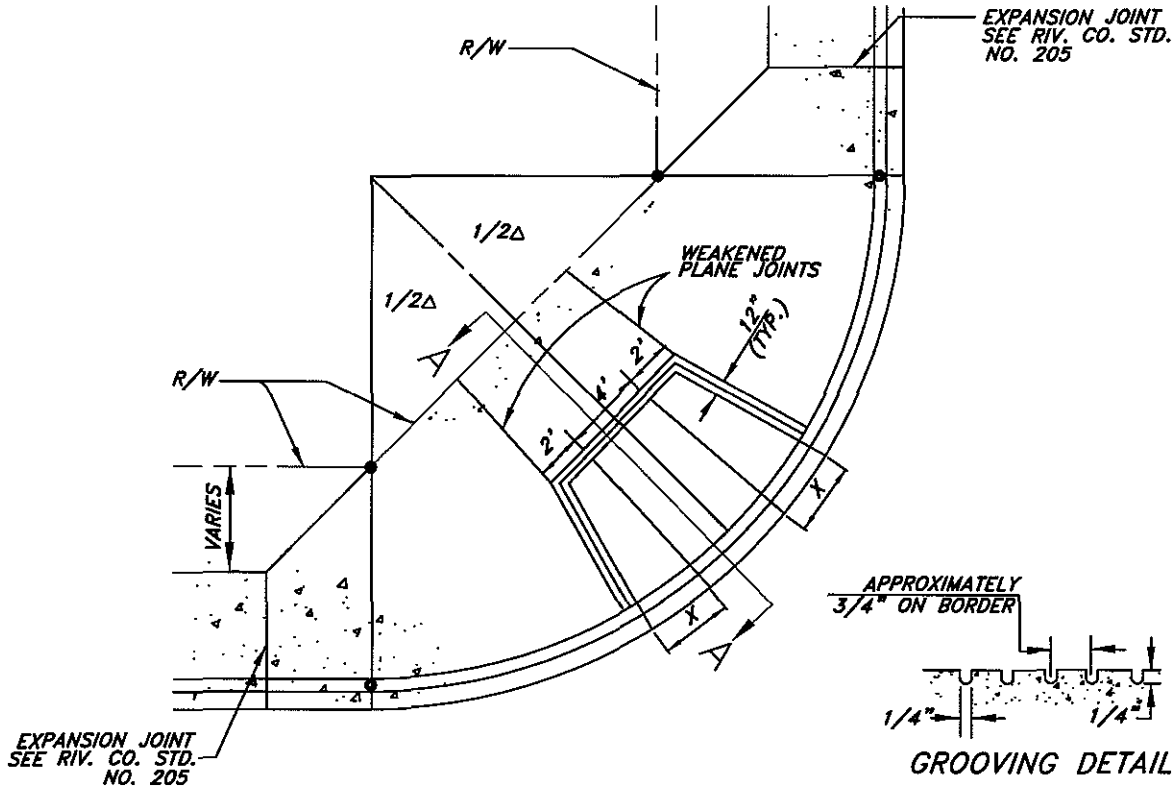

SECTION "A–A"

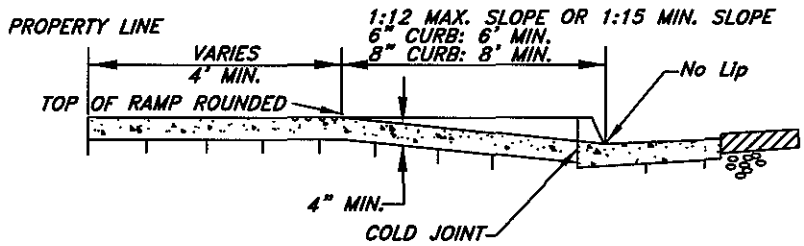

NOTES:

1.) CONCRETE SHALL BE CLASS 520–C–2500, CURED WITH WHITE PIGMENTED CURING COMPOUND.

2.) ADJUSTMENTS SHALL BE MADE IN THE FIELD AS NECESSARY TO ACHIEVE RAMP CONDITIONS.

3.) A LEVEL 4' MINIMUM DEPTH LANDING IS REQUIRED AT THE TOP OF THE RAMP OVER THE ENTIRE RAMP WIDTH. IF NOT POSSIBLE, SEE NOTE 4 BELOW.

4.) X SHALL HAVE A MAXIMUM SLOPE OF 1:10 (6" CURB X=5', 8" CURB X=6'–8".) IF THE LANDING IS LESS THAN 4', X SHALL BE A MAXIMUM SLOPE OF 1:12.

5.) BORDER 1' WIDE OF 1/4" DEEP X 1/4" WIDE GROOVES 3/4" APART ON THE LEVEL SURFACE AT THE TOP AND SIDES OF RAMP.

REVISION		ENGINEERING	DATE 07/09	CITY OF LAKE ELSINORE	
DATE	APPROVED	APPROVED BY		PREPARED BY PUBLIC WORKS	
		CITY ENGINEER	08/21/2009 DATE	ACCESS RAMP: TYPE II	2 OF 3 NO. 214B

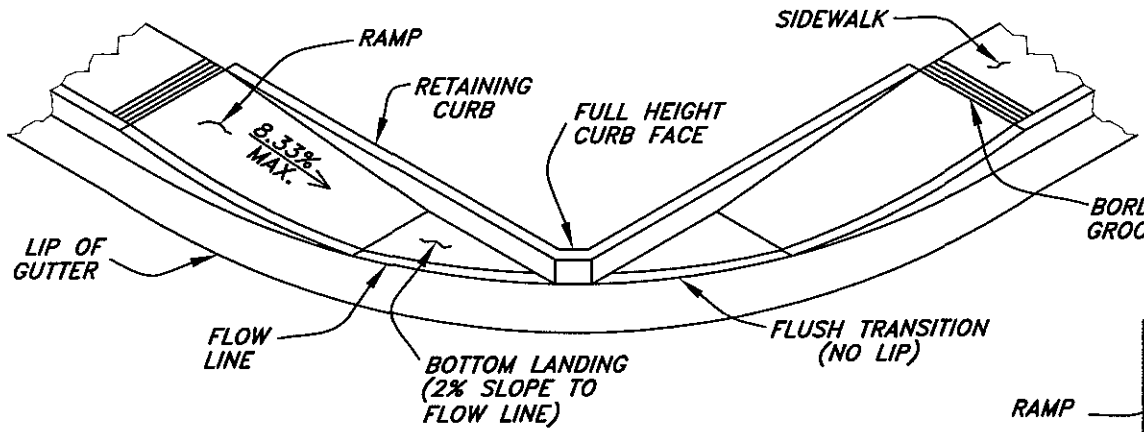

ISOMETRIC VIEW

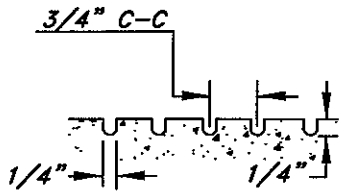

GROOVING DETAIL

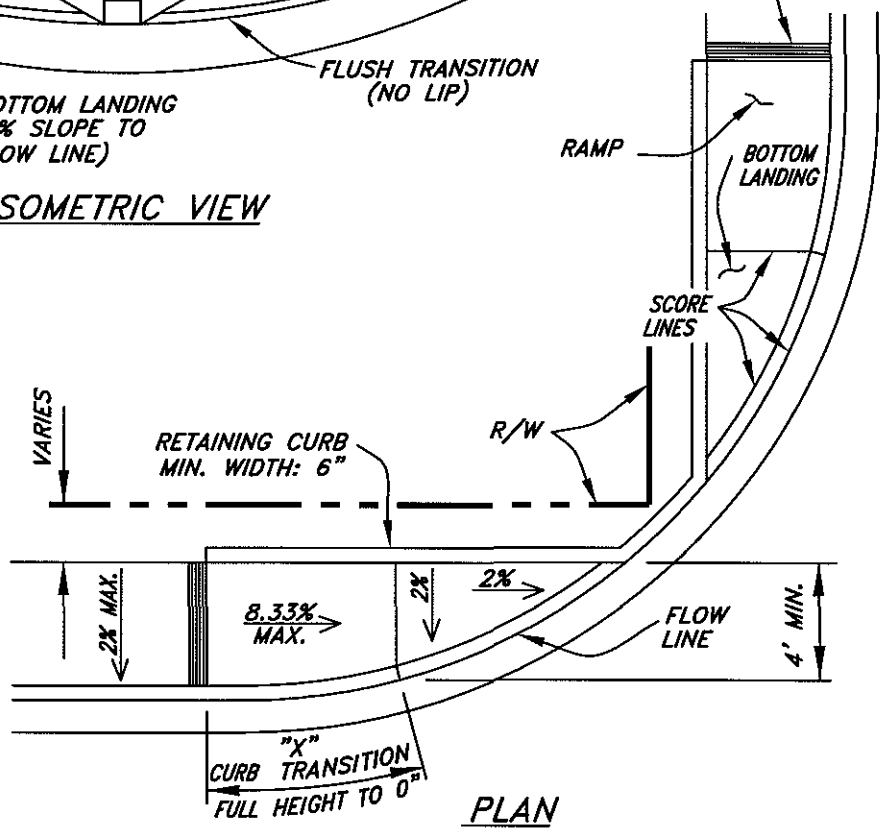

PLAN

NOTES:

1.) TYPE III RAMP MAY BE USED WHEN INSUFFICIENT RIGHT-OF-WAY EXISTS.

2.) ALL ACCESS RAMPS SHALL BE CONSTRUCTED TO THE MOST CURRENT REQUIREMENTS OF THE AMERICANS WITH DISABILITIES ACT (ADA) STANDARDS/CALIFORNIA CODE OF REGULATIONS TITLE 24-ACCESSIBILITY REGULATIONS. ADJUSTMENTS SHALL BE MADE IN THE FIELD TO ACHIEVE RAMP CONDITIONS.

3.) CONCRETE SHALL BE CLASS 560-C-3250, CURED WITH WHITE PIGMENTED CURING COMPOUND, AND MINIMUM THICKNESS FOR RAMP AND LANDING SHALL BE 4".

4.) X SHALL HAVE A MAXIMUM SLOPE OF 1:12 (8.33%), AND A MINIMUM SLOPE OF 1:15 (6.67%).

5.) GROOVED BORDER SHALL BE 12" WIDE ALONG THE TOP OF THE RAMP AT THE LEVEL SURFACE OF THE SIDEWALK. OMIT GROOVES ADJACENT TO NON-PAVED AREAS.

6.) RAMP SURFACE SHALL BE SLIP-RESISTANT AND SHALL BE OF CONTRASTING FINISH FROM ADJACENT SIDEWALK (MEDIUM BROOM FINISH OR EQUIVALENT).

7.) SEE STANDARD PLAN 411 FOR CROSSWALK DETAIL.

8.) THE SLOPES OF THE ROAD, GUTTER, OR ACCESSIBLE ROUTE ADJOINING THE CURB RAMP SHALL NOT EXCEED 1:20 (5%) WITHIN 4' OF THE TOP AND BOTTOM OF THE RAMP.

REVISION DATE	REVISION APPROVED	Engineering	DATE 07/09	CITY OF LAKE ELSINORE PREPARED BY PUBLIC WORKS	
		APPROVED BY CITY ENGINEER	08/31/2009 DATE	ACCESS RAMP: TYPE III	3 OF 3 NO. 214C

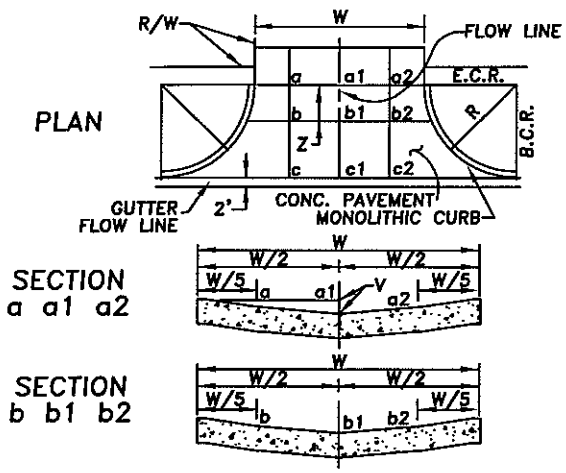

TYPE A:
STANDARD ALLEY INTERSECTION

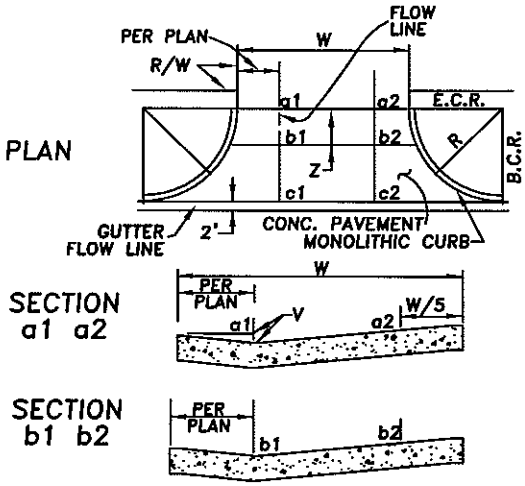

TYPE B:
ALLEY INTERSECTION
WITH OFF-SET FLOW LINE

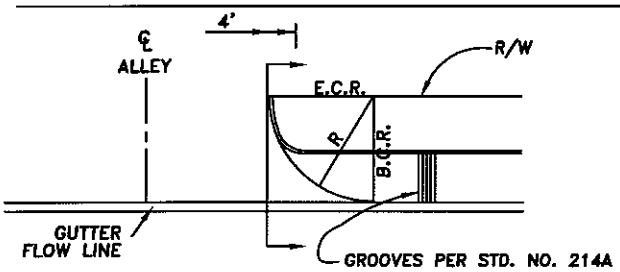

PLAN

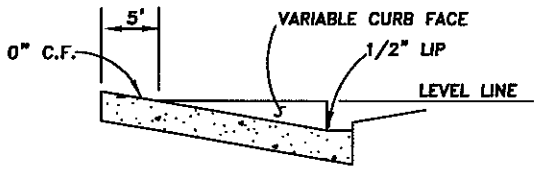

ALLEY INTERSECTION:
HANDICAP ACCESS

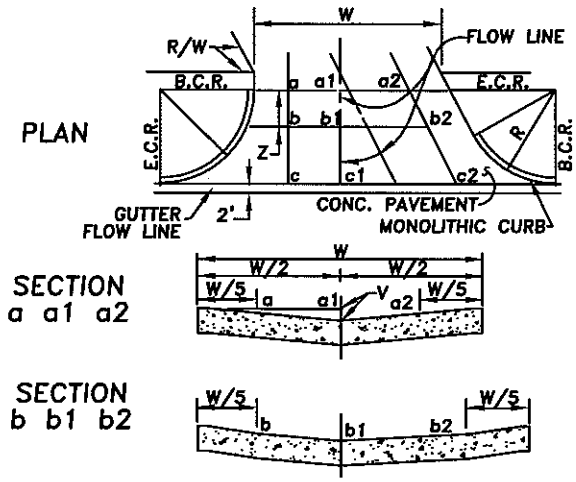

NOTES:

1.) V = THREE INCHES, UNLESS OTHERWISE SPECIFIED.

2.) POINTS b b1 b2 SHALL BE ON A STRAIGHT GRADE BETWEEN POINTS a a1 a2 AND POINTS c c1 c2 RESPECTIVELY.

3.) CONCRETE SURFACE FOR FOUR INCHES ON EACH SIDE OF A FLOW LINE SHALL BE GIVEN A STEEL TROWEL FINISH EXCEPT BETWEEN THE PROPERTY LINE AND THE GUTTER FLOW LINE.

4.) "Z" SHALL BE FIVE FEET UNLESS OTHERWISE SPECIFIED.

5.) CURB FACE SHALL BE VARIABLE BETWEEN LINES b b1 b2 AND c c1 c2.

6.) CURB FACE SHALL BE ZERO INCH BETWEEN LINES a a1 a2 AND b b1 b2 (SIDEWALK AREA) TO PROVIDE ACCESS FOR THE HANDICAPPED.

7.) CURB RETURNS SHALL HAVE A RADIUS (R) OF 12 FEET UNLESS OTHERWISE SPECIFIED. CURB RADIUS SHALL NOT EXCEED BORDER WIDTH.

8.) CONCRETE PAVEMENT SHALL BE 8 INCHES THICK UNLESS OTHERWISE SPECIFIED.

9.) ALL CONCRETE SHALL BE CLASS 560-C-3250, CURED WITH WHITE PIGMENTED CURING COMPOUND.

REVISION		ENGINEERING	DATE 07/09	CITY OF LAKE ELSINORE	
DATE	APPROVED	APPROVED BY		PREPARED BY PUBLIC WORKS	
		CITY ENGINEER	08/31/2009 DATE	ALLEY INTERSECTION	NO. 215

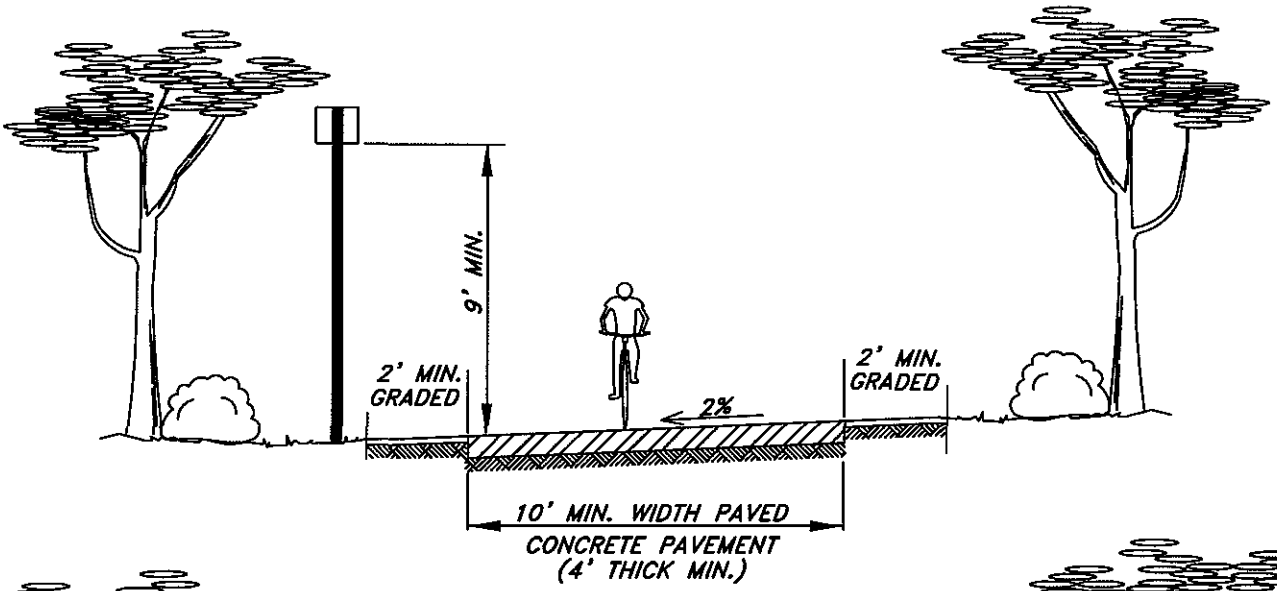

CLASS 1

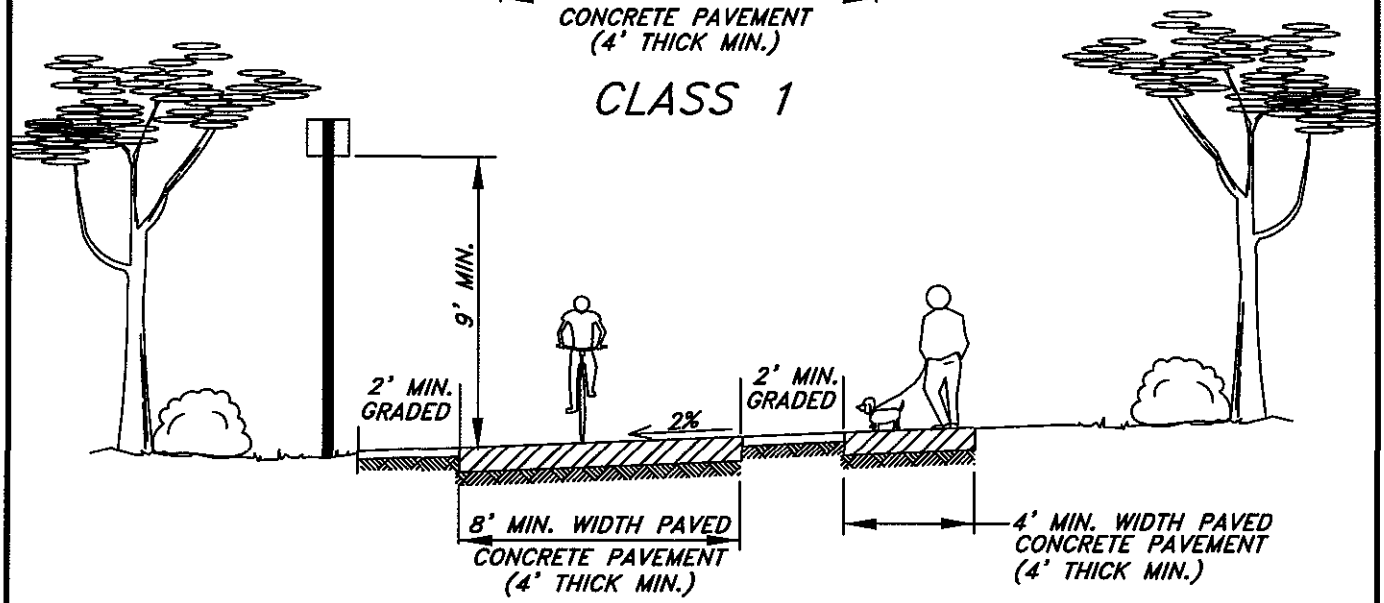

CLASS 1
(WITH PEDESTRIAN SEPARATION)

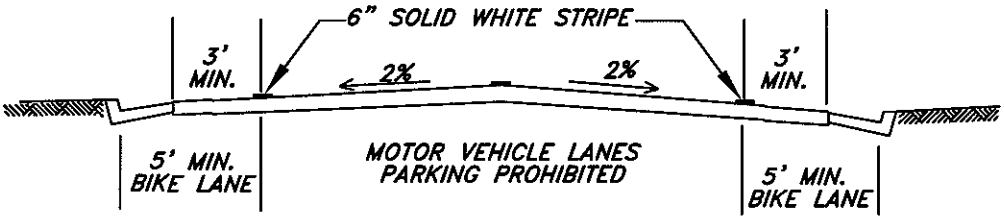

CLASS 2

NOTE: CLASS 3 BIKE ROUTES DESIGNATED WITH SIGNAGE ONLY.

REVISION DATE	REVISION APPROVED	ENGINEERING DATE 07/09	CITY OF LAKE ELSINORE PREPARED BY PUBLIC WORKS	
		APPROVED BY CITY ENGINEER 08/31/2009 DATE	TWO-WAY BIKE PATH ON SEPARATE RIGHT-OF-WAY	NO. 216

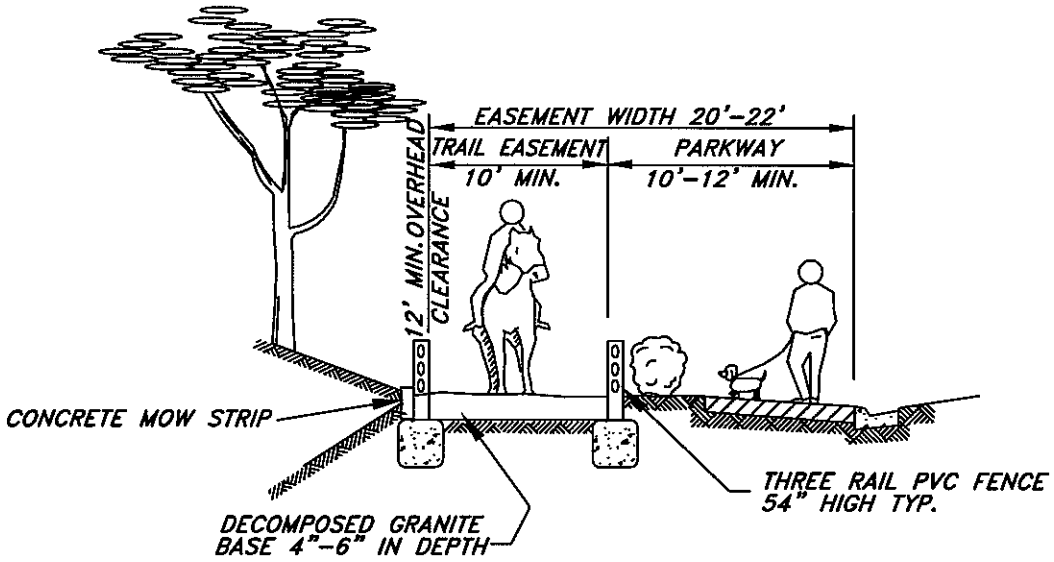

EQUESTRIAN TRAIL EASEMENT ADJACENT TO STREET WITH SIDEWALK

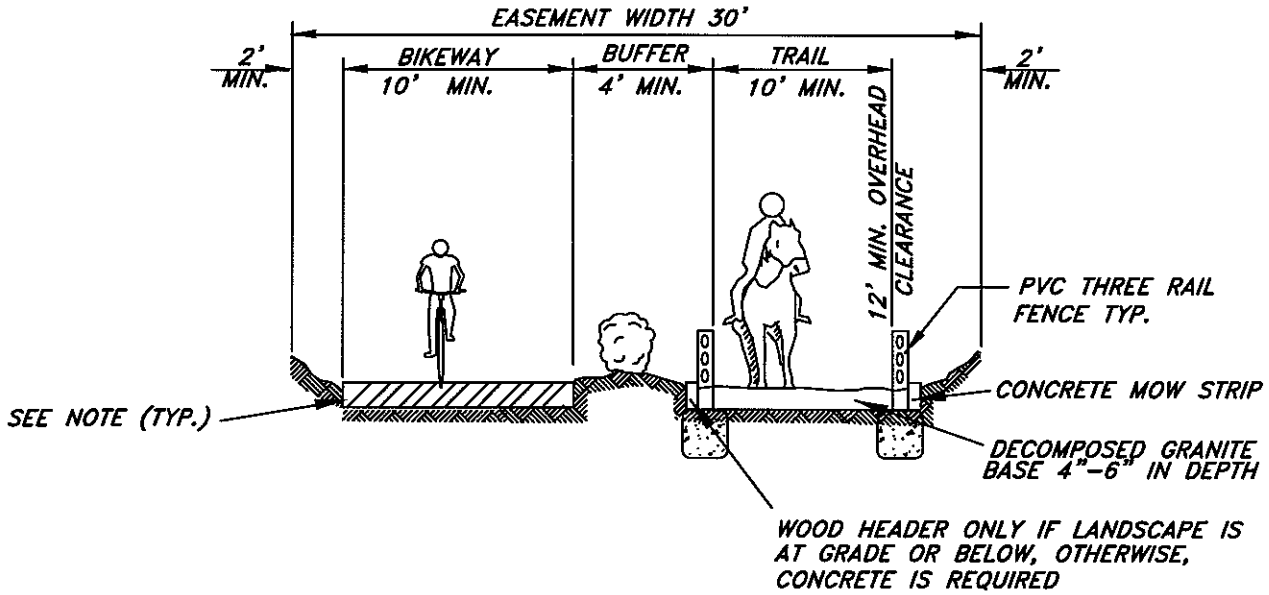

EQUESTRIAN TRAIL EASEMENT TRAIL AND BIKEWAY COMBINATION

NOTE: 2" THICK REDWOOD HEADER REQUIRED WHERE LANDSCAPE IS PROVIDED AT GRADE.

REVISION DATE	REVISION APPROVED	ENGINEERING DATE 07/09	CITY OF LAKE ELSINORE PREPARED BY PUBLIC WORKS	
		APPROVED BY CITY ENGINEER — DATE 08/31/2009	EQUESTRIAN TRAIL EASEMENT	1 OF 3 NO. 217A

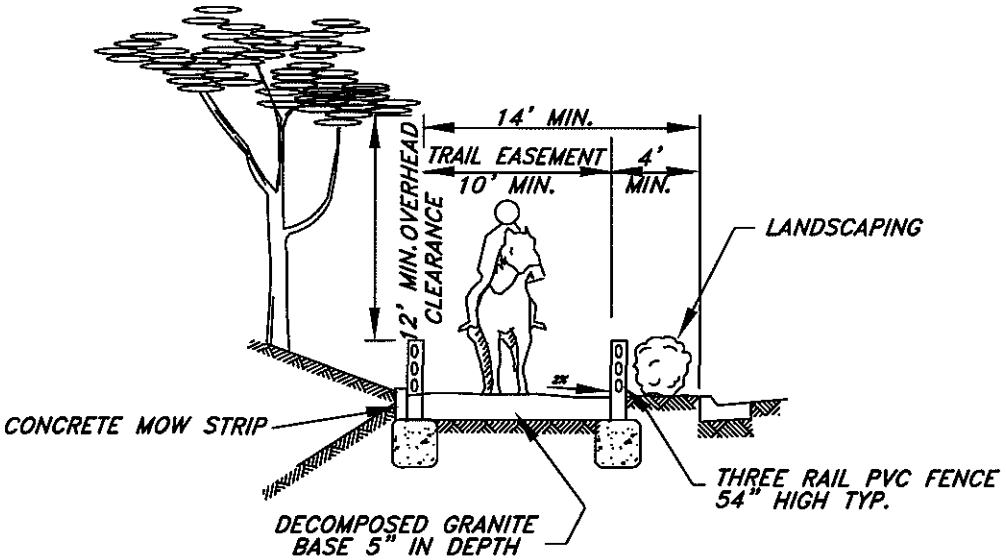

EQUESTRIAN TRAIL EASEMENT ADJACENT TO STREET WITHOUT SIDEWALK

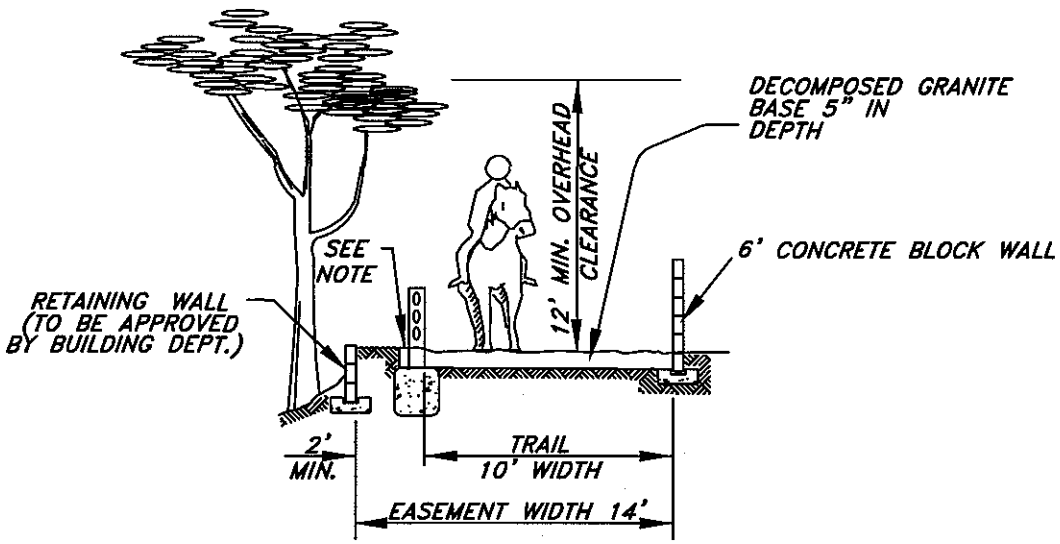

SECONDARY EQUESTRIAN TRAIL EASEMENT ADJACENT TO FENCE, BLOCK WALL OR RETAINING WALL

NOTE: REDWOOD HEADER REQUIRED WHERE LANDSCAPE IS PROVIDED.

REVISION DATE	REVISION APPROVED	ENGINEERING	DATE 07/09	CITY OF LAKE ELSINORE PREPARED BY PUBLIC WORKS	
		APPROVED BY			
		CITY ENGINEER	08/31/2009 DATE	EQUESTRIAN TRAIL EASEMENT	2 OF 3 NO. 217B

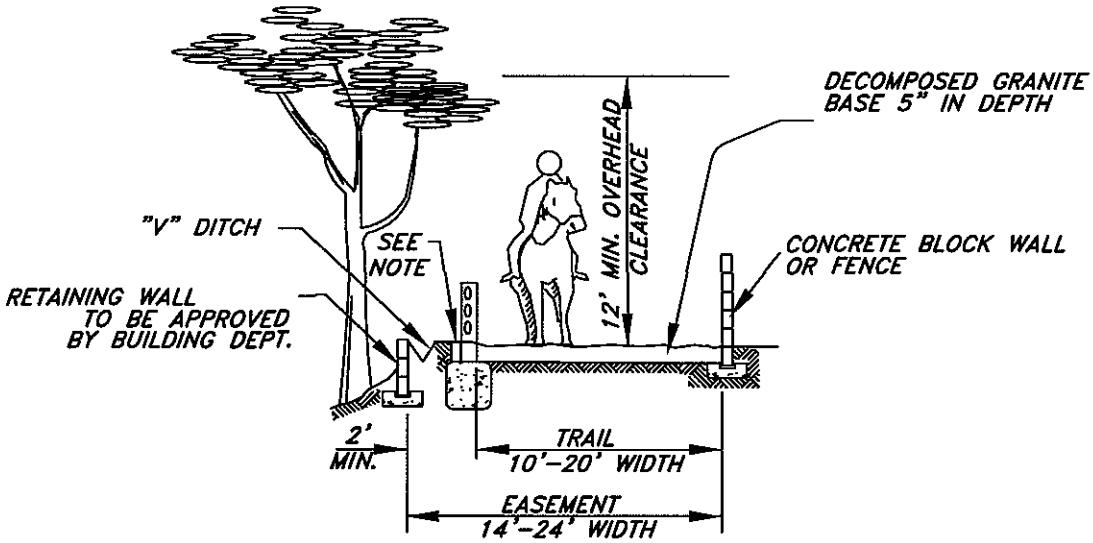

EQUESTRIAN TRAIL EASEMENT
ADJACENT TO FENCE, BLOCK WALL
OR RETAINING WALL

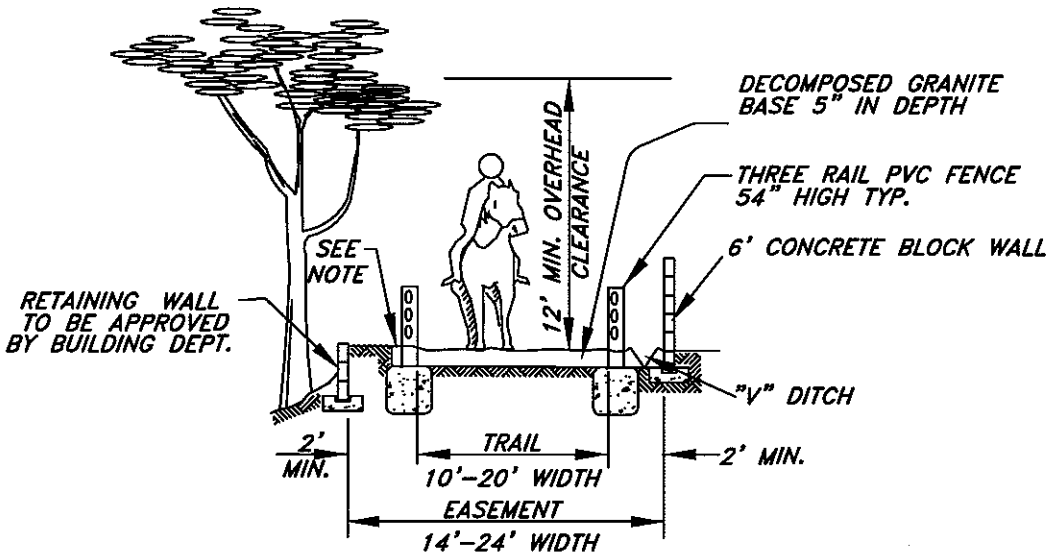

EQUESTRIAN TRAIL EASEMENT
ADJACENT TO FENCE, BLOCK WALL
OR RETAINING WALL

NOTE: REDWOOD HEADER REQUIRED WHERE LANDSCAPE IS PROVIDED.

REVISION DATE	REVISION APPROVED	ENGINEERING DATE 07/09	CITY OF LAKE ELSINORE PREPARED BY PUBLIC WORKS	
		APPROVED BY CITY ENGINEER — DATE 08/31/2009	EQUESTRIAN TRAIL EASEMENT	3 OF 3 NO. 217C

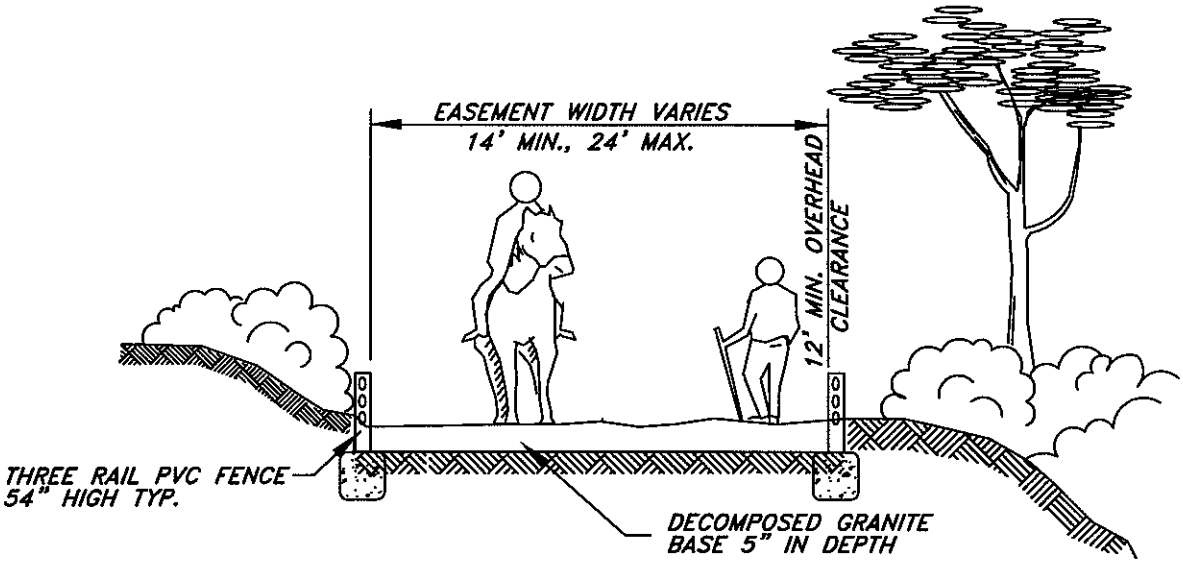

PRIMARY RIDING AND HIKING TRAIL
(STANDARD)

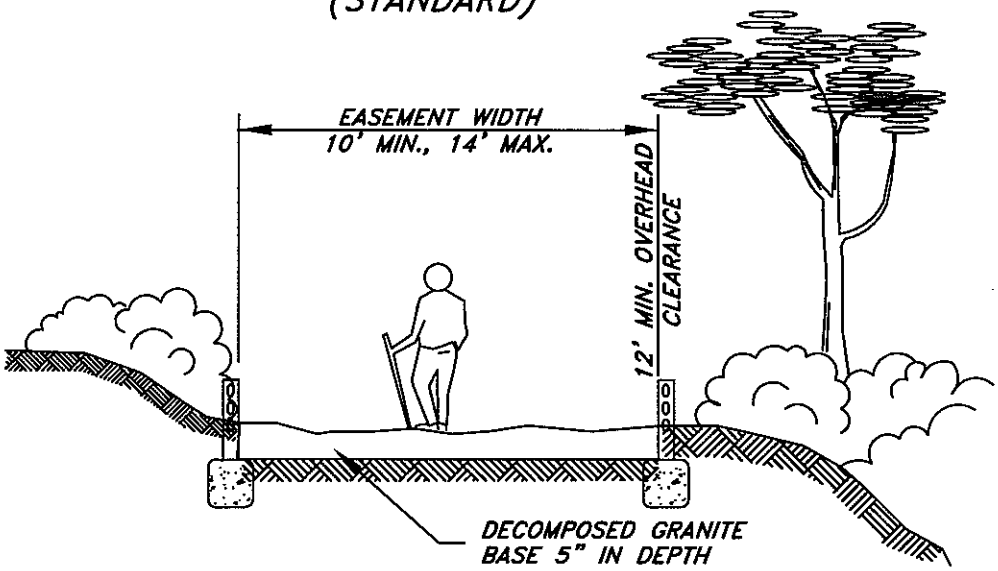

SECONDARY RIDING AND HIKING TRAIL
(STANDARD)

REVISION DATE	REVISION APPROVED	ENGINEERING DATE 07/09	CITY OF LAKE ELSINORE PREPARED BY PUBLIC WORKS	
		APPROVED BY CITY ENGINEER — DATE 08/31/2009	RIDING AND HIKING TRAILS	1 OF 6 NO. 218A

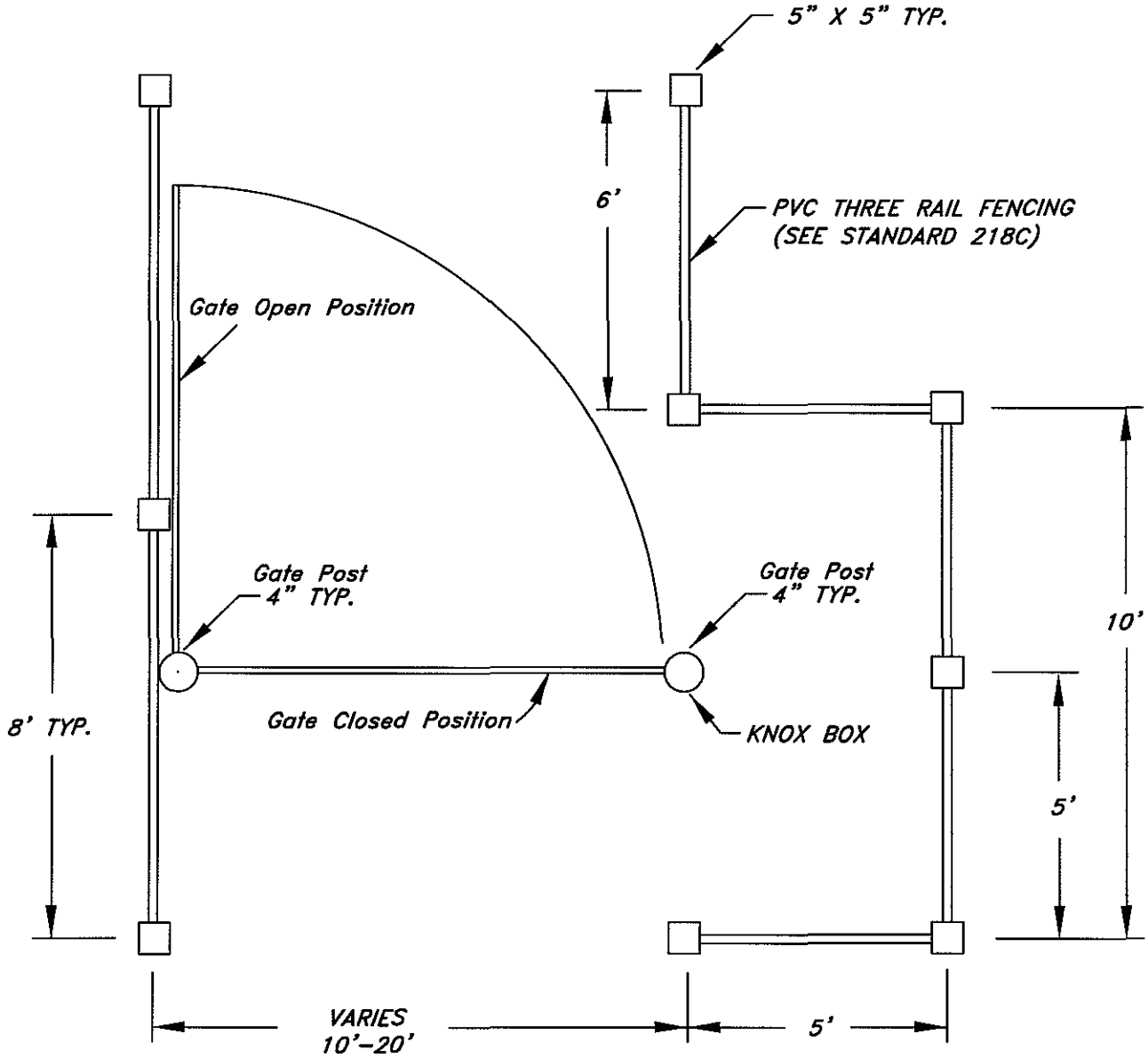

Note:
Gate to be constructed in accordance to specifications STD 218C.
width varies 10' - 20'.

REVISION DATE	REVISION APPROVED	ENGINEERING DATE 07/09	CITY OF LAKE ELSINORE PREPARED BY PUBLIC WORKS	
		APPROVED BY CITY ENGINEER — DATE 08/31/2009	EQUESTRIAN/MULTI-USE TRAIL SPECIFICATIONS	2 OF 6 NO. 218B

Fencing type/brand:

The fence material shall be PVC, 3-rail routed equestrian fencing.

- PVC fence color shall be almond, unless indicated otherwise.
- Fencing shall be installed with a finished height of 54" (top of post w/o cap).
- Posts shall be 5" x 5" square.
- Post footings shall be 12" diameter, 24" deep, spaced 8'0" on center where applicable. Post caps shall be installed with PVC clear solvent weld.
- 2000 lb. minimum PSI concrete shall be poured into posthole, then the post driven into the concrete. 'Green Book' standards shall be in affect for all concrete.
- Posts shall be installed plumb.
- Post routing: First hole shall be 3" from top of post. Mid rail is to be spaced 11" from bottom of top rail to top of mid rail. Third rail is to be spaced 11" from bottom of mid rail to top of third rail. Third rail is to have approximately 12" spacing from bottom of third rail to finish grade. Finish grade shall be calculated to top of decomposed granite path. See drawing detail.
- Rails shall be nominal 2" x 6" x 16' PVC.
- Minimum trail width shall be 10'. Where Fire Department access is necessary, trail shall be a minimum of 20' wide. Trail width is defined as minimum surface area without obstructions (fence posts, 'V' ditch, etc.).
- Equestrian fencing shall be installed on both sides of trail, unless approved by the Parks and Facilities Manager.
- Equestrian trailheads shall be utilized when a trail terminates at a public street or highway, where specified. The rough dimensions for equestrian switchbacks are 5' x 10'. See drawing details. A 'STOP' sign shall be installed at all locations that exit onto a roadway. Sign and post specifications are to adhere to the City's Standard Plans.
- The trail and fencing shall connect with adjacent trails.

- Gates are required in locations where fire and/or maintenance access is designated. Gates for openings shall be constructed of hot dipped galvanized steel pipe. Single gate width is not to exceed 10'. Gate openings in excess of 10' shall be equal sized double gates with a sleeved removable post 2-3/8" diameter. The gates shall be equipped with a latching mechanism and provisions made so the center post cannot be removed when the gates are latched. Additionally, the center post is to have a domed cap installed. All gates are to be equipped with a heavy-duty malleable iron fork latch assembly, heavy-duty chain, and Knox box. These items are to be welded to frame. Hinged posts shall be 4" SS-40 or schedule 40 pipe.

REVISION DATE	REVISION APPROVED	ENGINEERING DATE 07/09	CITY OF LAKE ELSINORE PREPARED BY PUBLIC WORKS	
		APPROVED BY CITY ENGINEER 08/31/2009 DATE	EQUESTRIAN/MULTI-USE TRAIL SPECIFICATIONS	3 OF 6 NO. 218C

Latch posts shall be 2-3/8" SS-40 or schedule 40 pipe. All gate posts, with the exception of the center post shall be filled with concrete and dome topped. Gate frames shall be constructed of 1-5/8", SS-40 galvanized pipe. Frames shall have mitered corners and the center rail shall be cut with a radius to fit into frame. Frames shall be attached to posts with two (2) 180-degree industrial hinges, bolted and tack-welded to frame and post. The rail spacing on the gates shall match the rail spacing on the fence. 2" x 6", #1 Douglas fir shall be attached to the hinge posts, gate frame and rails with 'U' bolts counter sunk into the wood, filled, and finished flat. The wood shall be pre-primed (all sides before installation) and finished with 2 coats of semi-gloss acrylic latex paint. Touch-up priming and painting shall be performed after installation where applicable. The primer shall be 'Vista' brand 'Uniprime'. The paint shall be 'Vista' brand 'Carefree Semi-Gloss', #60 "Indian White" color. Gate design alternates must be approved by the Parks and Facilities Manager or designee before installation.

Trail Surface:

- All plan details are required to show cross sections of the trail. The trail cross sections must reflect and indicate the various grade changes along the length of the trail. Trails shall not exceed a 10% grade in any area and have a 2% cross slope. The Parks and Facilities Manager shall approve any grade changes in writing before plans are approved and construction commences. All landings shall be gradually incorporated into the grade, in order to allow large vehicles easy transition. All details and grades for the trail shall be reviewed and approved by the Parks and Facilities Manager prior to any trail construction.

- Decomposed granite (DG) shall be the material utilized for the trail surface. The D.G. specification is '3/8 California Gold with Stabilizer', installed at 4" – 6" thick compacted depth. The Decomposed Granite shall conform to Greenbook Standards 400-2.3, 400-2.3.1, 400-2.3.2, and 4002.3.3. The Sieve Analysis shall conform to ASTM C 136 and the Sand Equivalent shall conform to ASTM D 2419. Compaction shall be obtained through a combination of water and heavy equipment roller. A sample must be submitted to the Parks and Facilities Manager or designee for approval before installation. Decomposed Granite available from: Gail Materials, Corona, California.

- Where trail is adjacent and level to landscaped areas, the decomposed granite shall be confined in trail by the use of 2" thick redwood header, staked at a minimum spacing of 4'.

- Where trail boundaries an upslope, down slope, or is otherwise indicated, concrete shall be required in place of redwood header. The specification for concrete border is 4"- wide x 6" - 12" deep, 2,500 lb. PSI, 5" slump ('Green Book' 500-C-2500), with #3 rebar reinforcement.

REVISION DATE	REVISION APPROVED	ENGINEERING DATE 07/09	CITY OF LAKE ELSINORE PREPARED BY PUBLIC WORKS	
		APPROVED BY CITY ENGINEER — DATE 08/31/2009	EQUESTRIAN/MULTI-USE TRAIL SPECIFICATIONS	4 OF 6 NO. 218D

Concrete:

- All concrete shall be in accordance to "Greenbook" Standard Specification For Public Works Construction, Section 201, unless otherwise noted. Copies of all load tickets are required to be submitted to the Parks Division weekly.

- All concrete for 'V' or brow ditches, catch basins, swales, retaining walls, channels, drive approaches, and other flatwork shall be integrally mixed with Davis Colors concentrated pigments at the rate specified by the manufacturer. The color shall be "Omaha Tan". Finishes shall be per plan. Colored concrete shall be cured with Davis W-1000 Clear spray-on membrane. Any requested color deviances require a color chart submittal, product specification, and a finished sample of the product submitted to the Parks and Facilities Manager for written approval prior to any trail construction.

- "V" or brow ditch shall be separated from the trail by PVC fencing.

- Concrete drive approaches to trails shall be constructed 6"-thick, 3250 PSI, 4" slump ('Green Book' 560-C-3250), with #4 rebar tied 12" O.C. The finish shall be rough. All joints shall be deep trowel.

Masonry:

- The side of the trail that is adjacent to residences shall contain fencing constructed of concrete block or concrete block/ornamental iron with a minimum height of 72". The concrete block color shall be Angelus #201 or equal. The concrete block design and color shall be approved by the City's Planning Division and the Parks and Facilities Division.

- All masonry adjacent to trails and their entrances shall be graffiti coated with 'Vitrocem Hi-Build Anti Graffiti Glazed Coatings', Manufactured by Bithel Inc @(800) 277-1676. Follow manufacturers directions for application. Any requested product deviances require a product specification sheet and a finished sample of the product. They shall be submitted to the Parks and Facilities Manager for written approval prior to any trail construction.

Drawings and Inspections:

- All construction drawings must be submitted to the Parks and Facilities Manager and approved before construction begins.
- All changes shall be "Redlined" and approved by the Parks and Facilities Manager and the architect before they are made.

REVISION DATE	REVISION APPROVED	ENGINEERING DATE 07/09	CITY OF LAKE ELSINORE PREPARED BY PUBLIC WORKS	
		APPROVED BY CITY ENGINEER — DATE 08/31/2009	EQUESTRIAN/MULTI-USE TRAIL SPECIFICATIONS	5 OF 6 NO. 218E

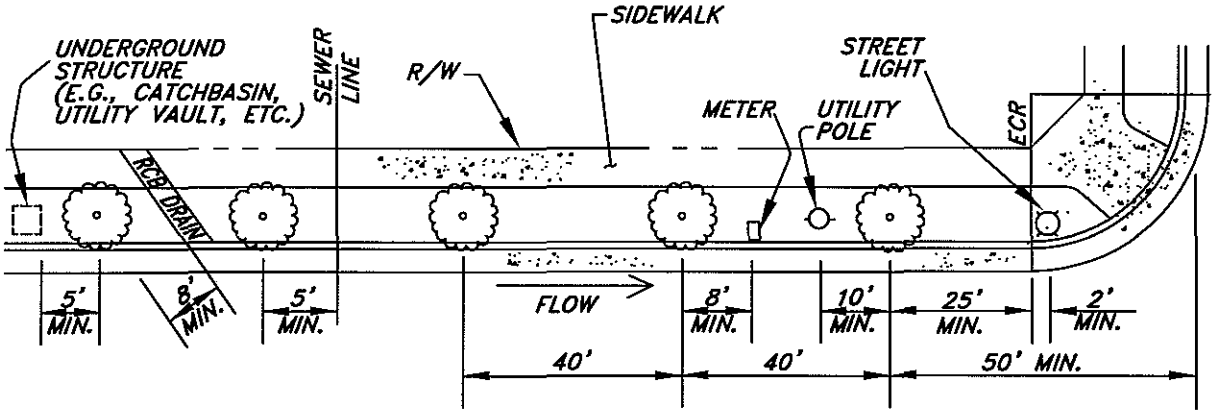

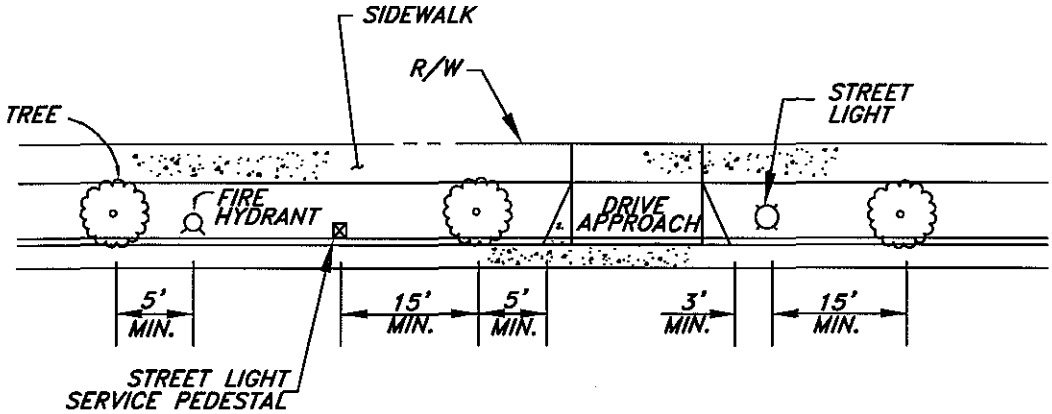

NOTES:

1.) DRIVE APPROACHES SHALL NOT BE LOCATED OVER SEWER OR WATER LATERALS.

2.) WATER METERS, FIRE HYDRANTS, AND STREET LIGHTS SHALL BE A MINIMUM OF 3' FROM DRIVE APPROACHES.

3.) ALTERNATE LOCATION AND SPACING MAY BE REQUIRED BY CITY ENGINEER TO PROVIDE FOR SITE CLEARANCE OR OTHER SAFETY CONCERNS.

REVISION DATE	REVISION APPROVED	ENGINEERING DATE 07/09	CITY OF LAKE ELSINORE PREPARED BY PUBLIC WORKS	
		APPROVED BY CITY ENGINEER — DATE 08/31/2009	PARKWAY IMPROVEMENT SPACING	NO. 219

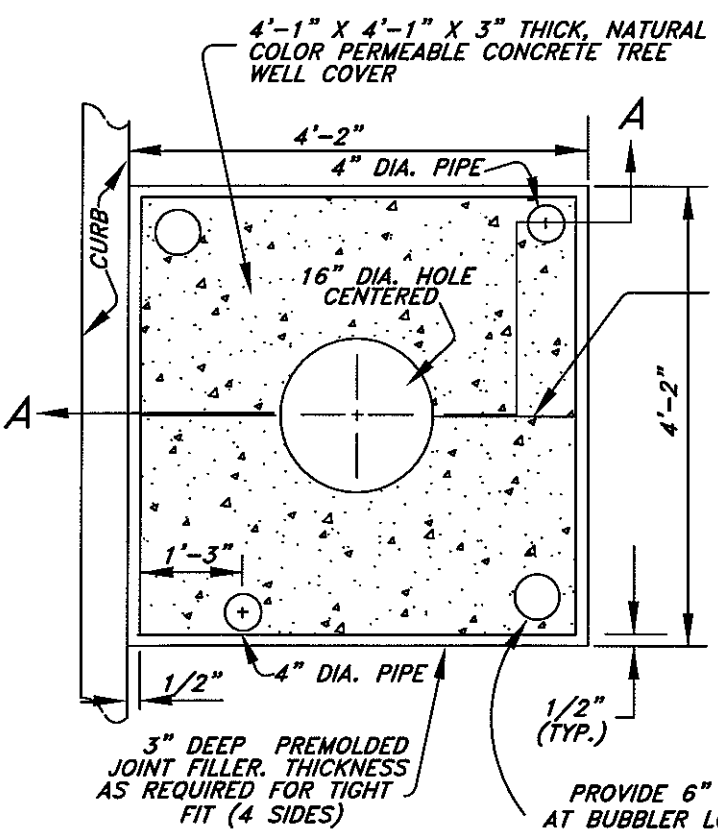

CASE 1

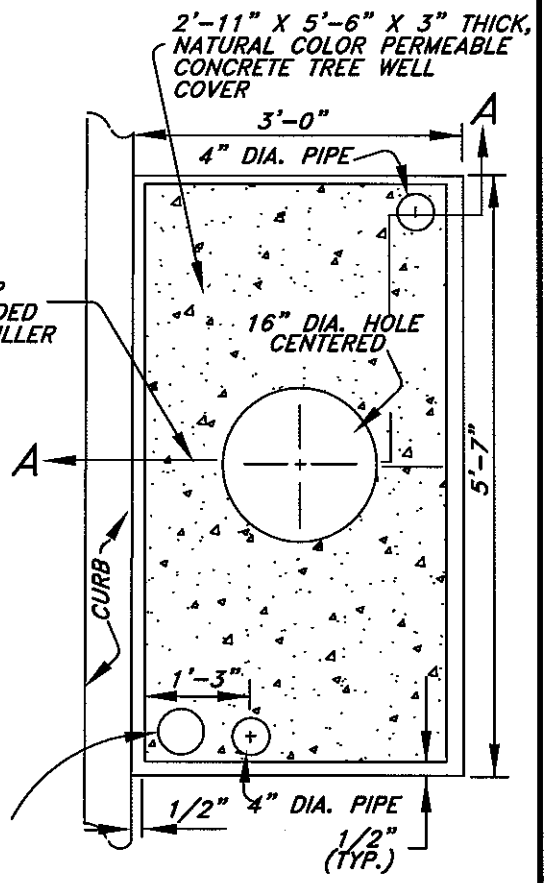

CASE 2

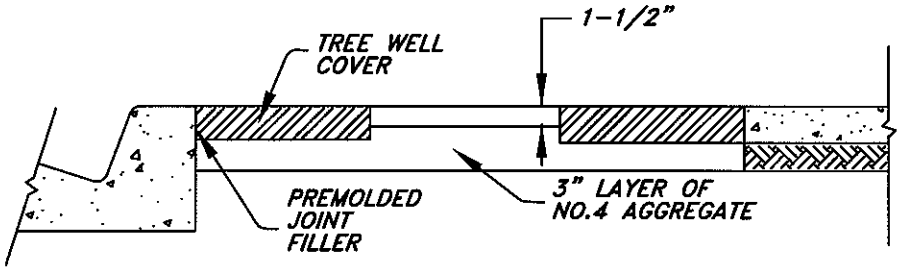

SECTION "A-A"

NOTE:

NO TREES SHALL BE LOCATED WITHIN 200' OF AN INTERSECTION WITHOUT PRIOR APPROVAL OF THE TRAFFIC ENGINEER.

REVISION DATE	REVISION APPROVED	ENGINEERING	DATE 07/09	CITY OF LAKE ELSINORE PREPARED BY PUBLIC WORKS	
		APPROVED BY CITY ENGINEER	08/31/2009 DATE	TREE WELL: TYPE 1	1 OF 5 NO. 220A

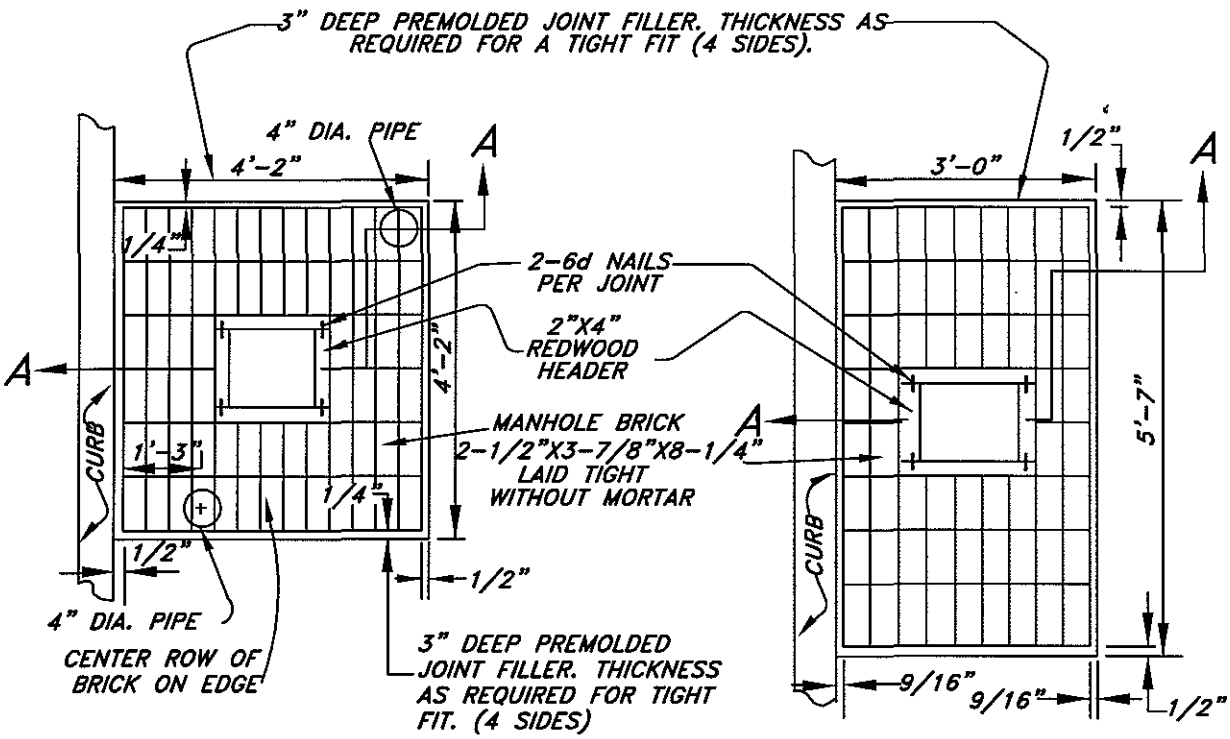

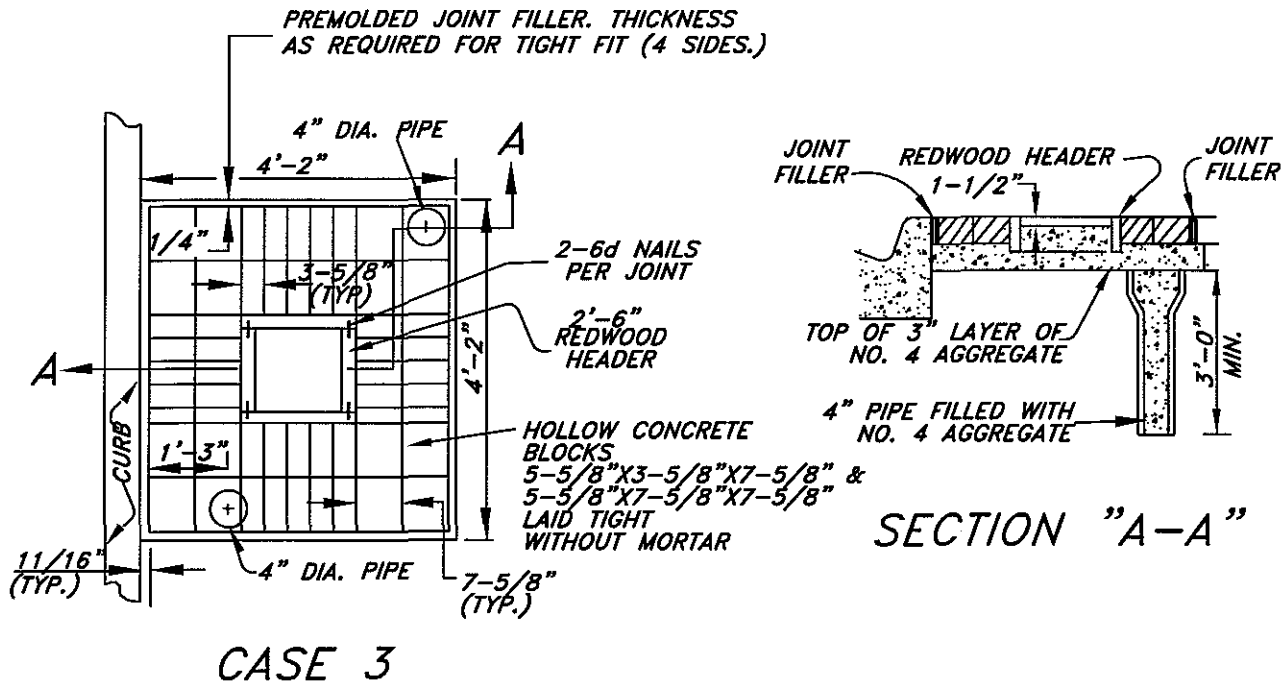

REVISION DATE	APPROVED	ENGINEERING DATE 07/09	CITY OF LAKE ELSINORE
		APPROVED BY	PREPARED BY PUBLIC WORKS
		CITY ENGINEER — DATE 08/31/2009	TREE WELL: TYPE 2 — 2 OF 5 — NO. 220B

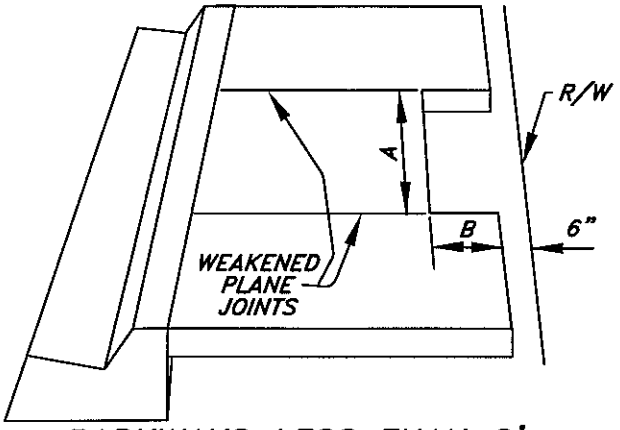

PARKWAYS LESS THAN 8' STYLE
CASE 1: 1'-6" X 3' TREE WELL
CASE 2: 2'-4" TREE WELL

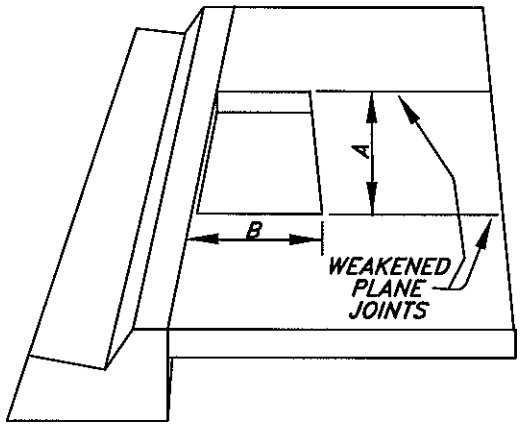

PARKWAYS 8' OR GREATER
2 COVERS REQUIRED
CASE 3: 3'-3" TREE WELL
CASE 4: 4'-4" TREE WELL

TREE WELLS

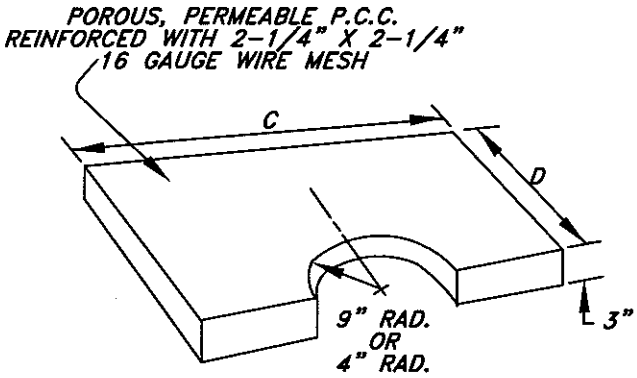

POROUS TREE WELL COVER

CASE	A	B	C	D
1	3'-0"	1'-6"	2'-11"	1'-5 1/2"
2	4'-0"	2'-0"	3'-11"	1'-11 1/2"
3	3'-0"	3'-0"	2'-11"	1'-5 1/2"
4	4'-0"	4'-0"	3'-11"	1'-11 1/2"

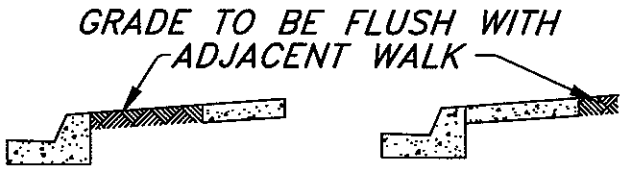

TYPICAL SECTIONS

NOTES:

1.) TREE WELLS SHALL BE SPACED AS DIRECTED BY THE CITY ENGINEER OR INDICATED ON THE CONTRACT DOCUMENTS.

2.) LOCATION OF TREES WILL BE SUBJECT TO THE FOLLOWING CONDITIONS:
A. MIN. 25' FROM CURB RETURNS.
B. MIN. 15' FROM LIGHT STANDARDS.
C. MIN. 5' FROM FIRE HYDRANTS.
D. MIN. .5' FROM DRIVEWAYS.

3.) COVERS ARE TO BE COLORED BUFF USING AN ACCEPTABLE COLORING AGENT.

4.) TREE WELLS ARE TO BE BACKFILLED WITH CLEAN DIRT AND FLUSH WITH ADJACENT WALK UNTIL TREES ARE PLANTED.

5.) PARKWAYS LESS THAN 8': CASE 1-UNLESS OTHERWISE SPECIFIED. CASE 2-USE WHERE THERE IS AN EXISTING FENCE OR WALL AT THE P.L. CASE 3-UNLESS OTHERWISE SPECIFIED. CASE 4-MAY BE SPECIFIED WITH WALKS 7' OR GREATER.

REVISION DATE	REVISION APPROVED	ENGINEERING DATE 07/09	CITY OF LAKE ELSINORE PREPARED BY PUBLIC WORKS	
		APPROVED BY CITY ENGINEER — DATE 08/31/2009	TREE WELL: TYPE 3	3 OF 5 NO. 220C

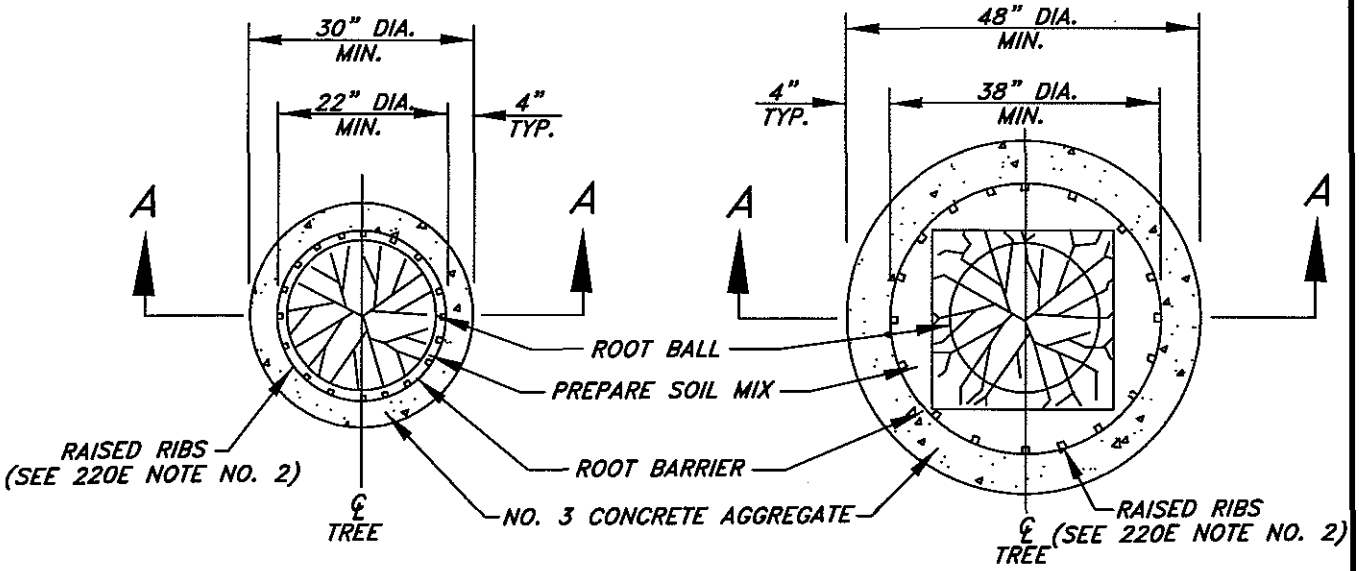

CASE 2
(15 GALLON SIZE OR LESS)

CASE 1
(BOXED TREE 24" SIZE OR LESS)

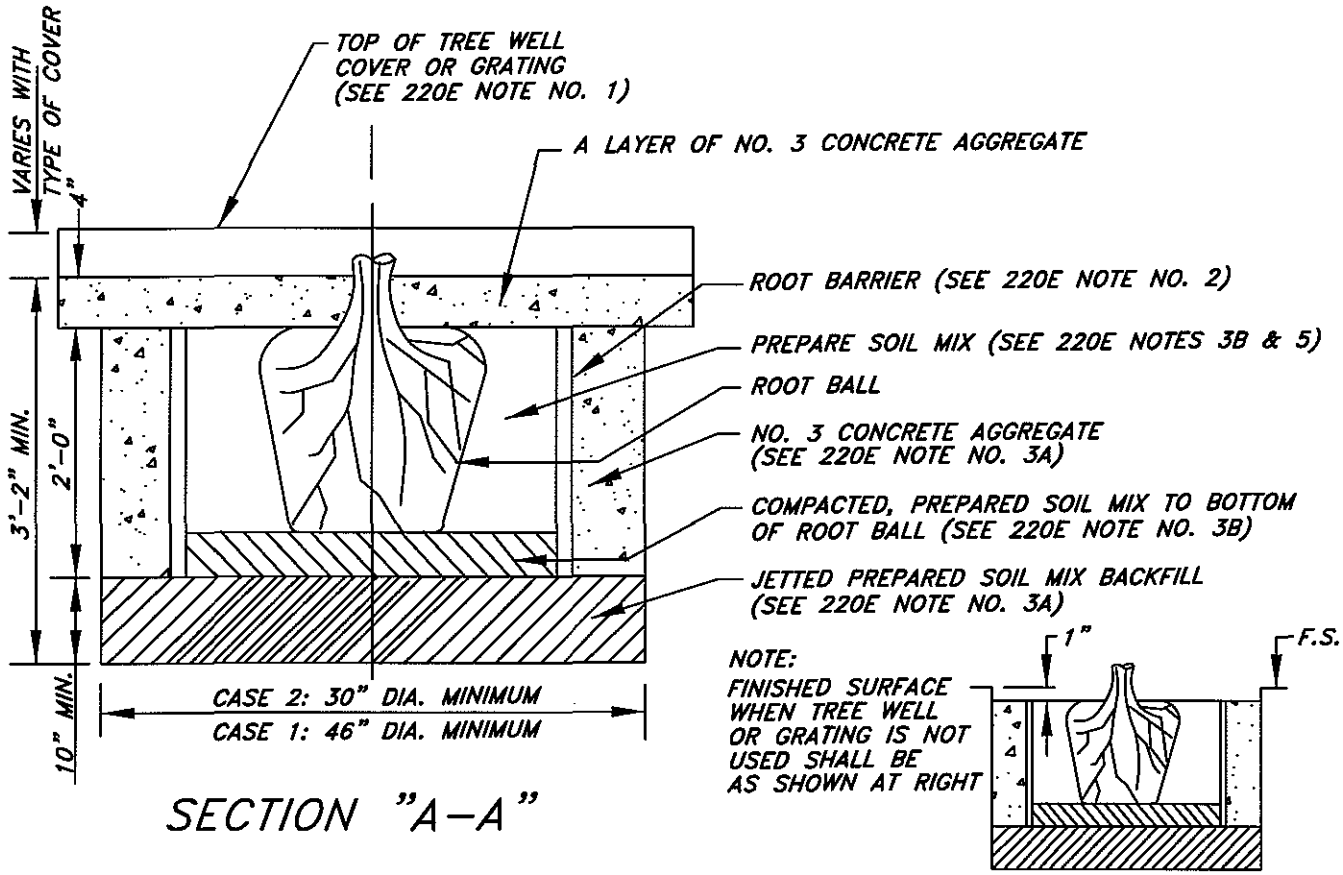

SECTION "A–A"

REVISION DATE	REVISION APPROVED	ENGINEERING DATE 07/09	CITY OF LAKE ELSINORE PREPARED BY PUBLIC WORKS	
		APPROVED BY CITY ENGINEER — DATE 08/31/2009	TREE WELL: TYPE 4	4 OF 5 NO. 220D

NOTES:

1.) See project plans for type of tree well cover or tree guard and grating to be used.

2.) Root barrier shall be fabricated from a high density and high impact plastic such as polyvinyl chloride, ABS or polyethylene and have a minimum thickness of 0.6 inch. The plastic shall have 1/2" high raised vertical ribs on the inner surface spaced not more than 6" apart. Installation per manufacturer's printed instructions.

3.) Planting shall conform to subsection 308-4 of the Standard Specifications for Public Works Construction, except that:

   a. The lower 10" of the excavation shall be backfilled with prepared soil mix and jetted prior to placing the root barrier and the no. 3 concrete aggregate.

   b. Prepared soil mix shall be placed in the planting hole and compacted to bottom of root ball elevation prior to proceeding with tree planting.

4.) After planting, each tree shall be watered immediately with a minimum of 20 gallons of water. Repeat the watering twice in the next 3 days, at no closer than 24 hour intervals.

5.) After the tree has been watered for three days, allow the soil to dry sufficiently, then tamp and grade the soil. Place and grade the layer of concrete aggregate in order to set the tree well cover or grating firmly and flush with the top of the sidewalk or curb.

REVISION			
DATE	APPROVED	ENGINEERING DATE 07/09	CITY OF LAKE ELSINORE PREPARED BY PUBLIC WORKS
		APPROVED BY CITY ENGINEER — DATE 08/31/2009	TREE WELL NOTES — 5 OF 5 — NO. 220E

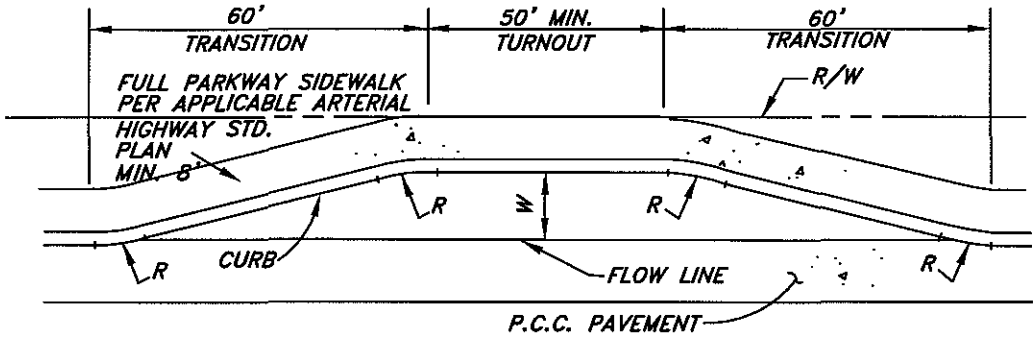

MID-BLOCK

W = VARIES PER STANDARD 100 OR AS REQUIRED BY CITY ENGINEER

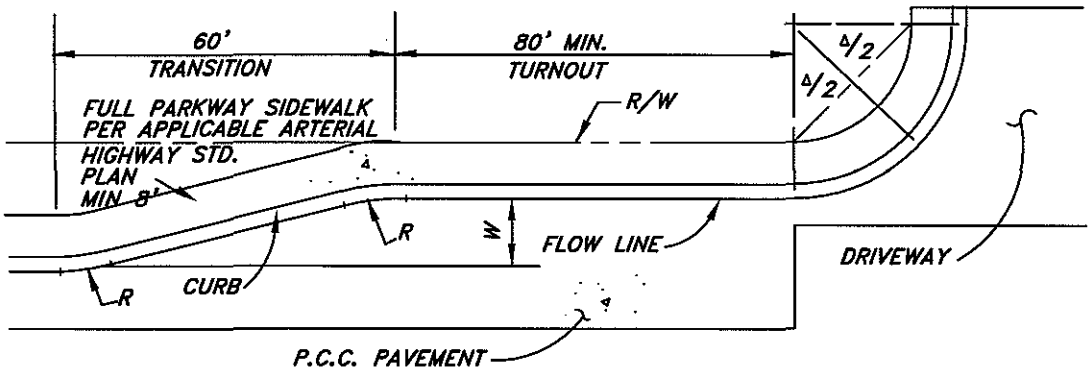

FAR SIDE OF DRIVEWAY

NOTES:

1.) R = 50'.

2.) P.C.C. PAVEMENT THICKNESS SHALL BE DETERMINED BY THE ENGINEER. MINIMUM THICKNESS SHALL BE 8".

3.) BUS SHELTERS SHALL BE SET BACK FROM THE FACE OF THE CURB A MINIMUM CLEAR DISTANCE OF FOUR (4) FEET FOR PEDESTRIAN TRAVELWAY.

4.) CURB SHALL BE POURED MONOLITHIC WITH P.C.C. PAVEMENT.

5.) MODIFICATIONS OF THIS STANDARD SHALL BE REVIEWED FOR ACCEPTABILITY BY THE CITY ENGINEER.

6.) CONCRETE SHALL BE CLASS 560-C-3250.

7.) ADDITIONAL R/W MAY BE REQUIRED BY CITY ENGINEER.

8.) REFER TO 121(A) FOR KEY TO VARIABLES

REVISION		ENGINEERING	DATE 07/09	CITY OF LAKE ELSINORE	
DATE	APPROVED	APPROVED BY		PREPARED BY PUBLIC WORKS	
		CITY ENGINEER	DATE	BUS TURNOUTS	NO. 121A

X	Y	W	Z	V
13	2	9	11	11
14	2	8	10	12
15	3	7	10	12
16	4	6	10	12
17	5	5	10	12
18	6	4	10	12
19	6	4	10	13
20	6	4	10	14
21	6	4	10	15
22	6	4	10	16

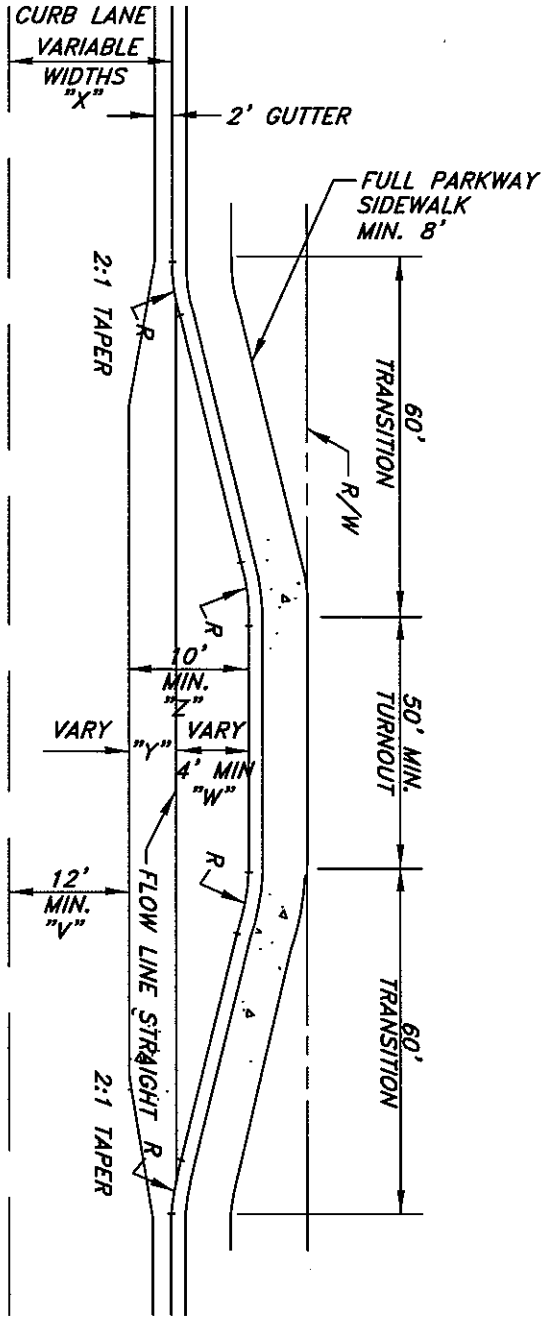

NOTES:

1.) R = 50'.

2.) P.C.C. PAVEMENT THICKNESS SHALL BE DETERMINED BY THE ENGINEER. MINIMUM THICKNESS SHALL BE 8".

3.) BUS SHELTERS SHALL BE SET BACK FROM THE FACE OF THE CURB A MINIMUM CLEAR DISTANCE OF FOUR (4) FEET FOR PEDESTRIAN TRAVELWAY.

4.) CURB SHALL BE POURED MONOLITHIC WITH P.C.C. PAVEMENT.

5. MODIFICATIONS OF THIS STANDARD MAY BE MADE BY THE CITY ENGINEER.

6.) CONCRETE SHALL BE CLASS 560-C-3250.

7.) ADDITIONAL R/W MAY BE REQUIRED BY CITY ENGINEER.

REVISION DATE	REVISION APPROVED	ENGINEERING DATE 07/09	CITY OF LAKE ELSINORE PREPARED BY PUBLIC WORKS	
		APPROVED BY CITY ENGINEER — DATE 08/21/2009	BUS TURNOUTS	NO. 121B

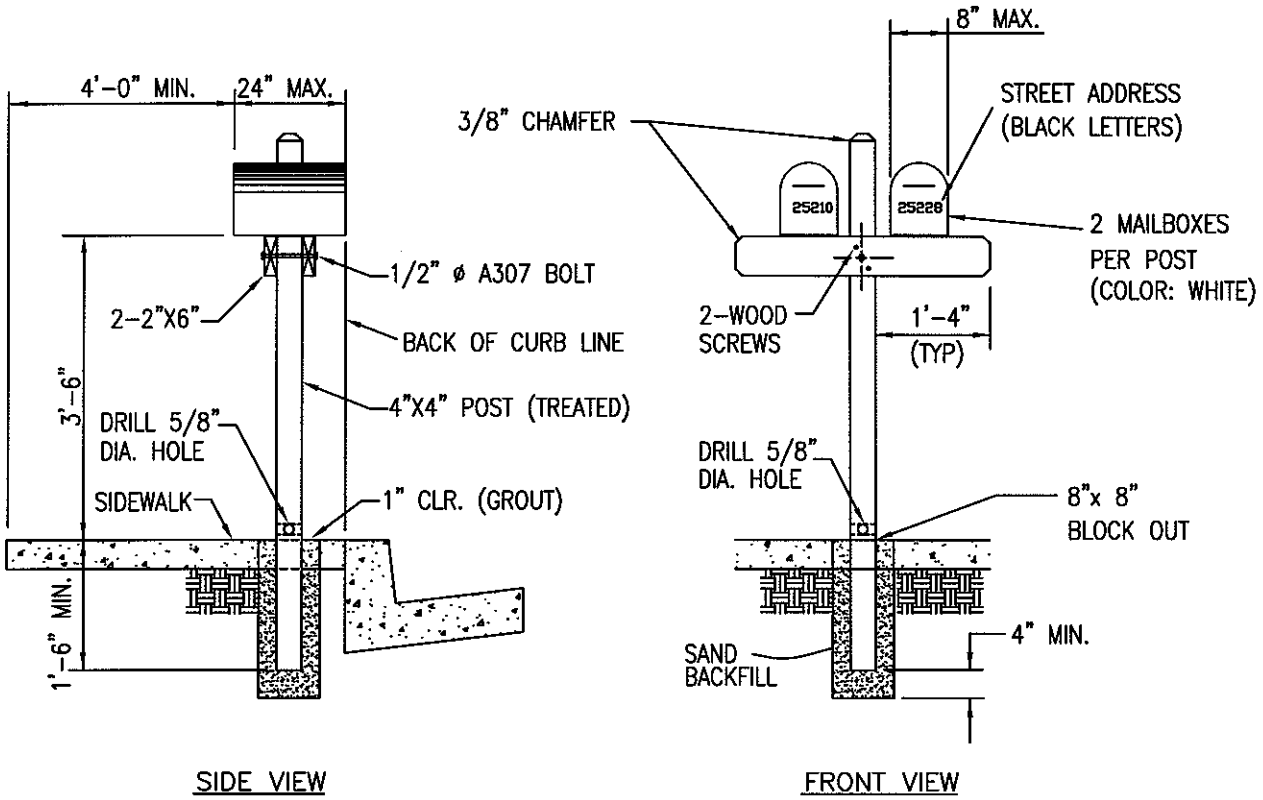

NOTE:

1. *TOP AND END OPENING MAILBOXES PERMITTED PROVIDED THAT THE FACE OF MAILBOX DOES NOT EXTEND BEYOND BACK OF CURB LINE. OPENING MUST FACE STREET.*

REVISION DATE	REVISION APPROVED	ENGINEERING DATE 07/09	CITY OF LAKE ELSINORE PREPARED BY PUBLIC WORKS	
		APPROVED BY CITY ENGINEER 08/31/2009 DATE	SINGLE POST MAILBOX INSTALLATION	NO. 222

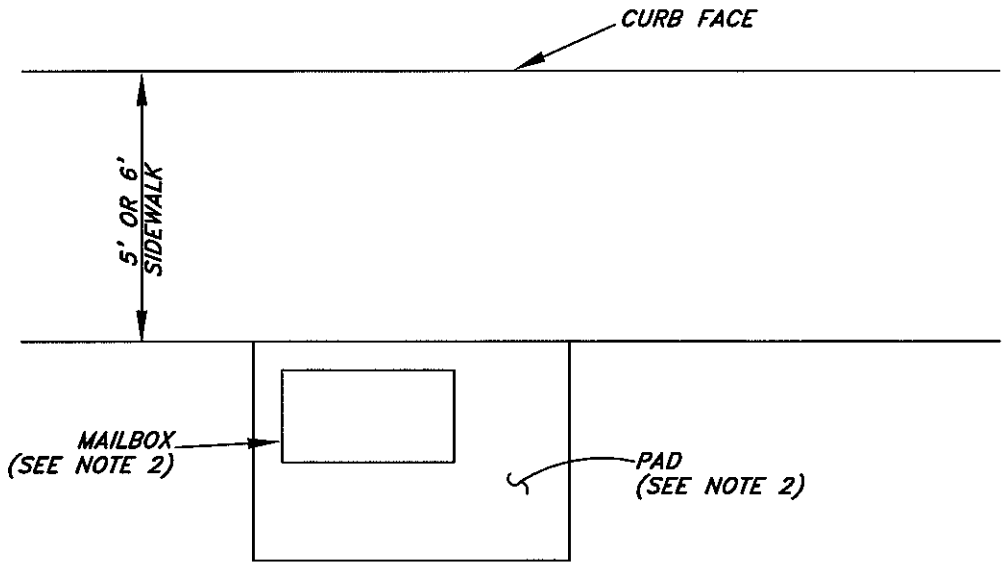

CASE "A"

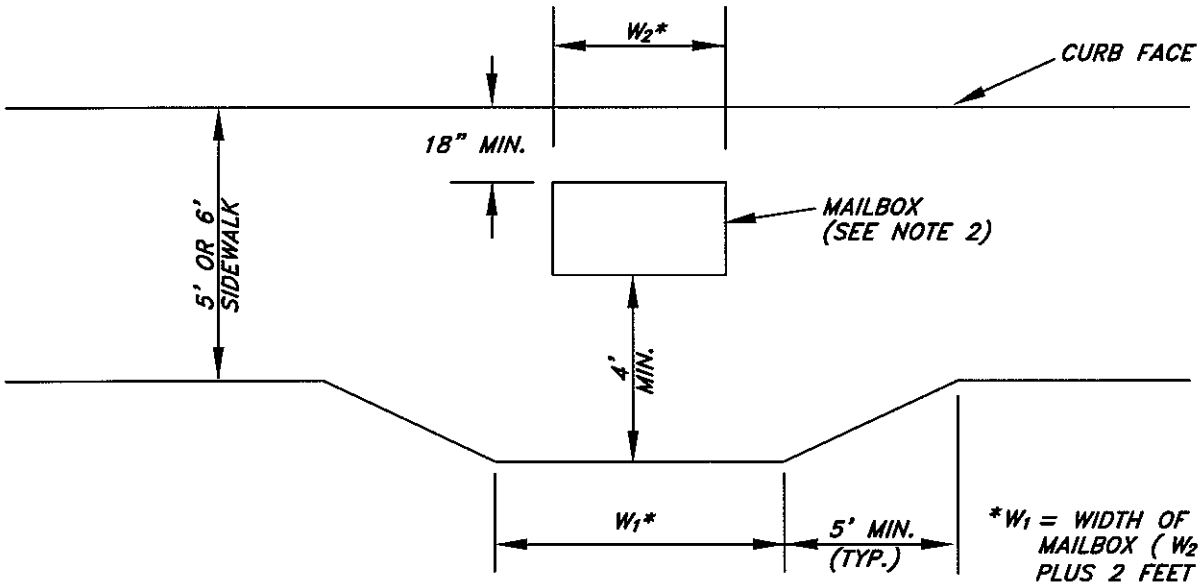

CASE "B"

NOTES:

1. CASE "A" SHALL BE THE PREFERRED LOCATION FOR MAILBOX. WHEN FIELD CONDITIONS INDICATE, CASE "B" MAY BE USED.
2. MAILBOX LOCATION, FOUNDATION, PAD, ANCHOR BOLTS AND BOLT HOLES SHALL CONFORM TO SPECIFICATIONS FURNISHED BY THE POSTMASTER.
3. NO MAILBOXES SHALL BE LOCATED ON INDUSTRIAL COLLECTORS OR GREATER ROAD CLASSIFICATION.

REVISION DATE	REVISION APPROVED	ENGINEERING DATE 07/09	CITY OF LAKE ELSINORE PREPARED BY PUBLIC WORKS	
		APPROVED BY CITY ENGINEER — DATE 08/31/2009	MULTIPLE MAILBOX INSTALLATION FOR NEW SIDEWALK	NO. 223

NOTES:

1.) The contractor for the stamped concrete shall provide conclusive proof that he or she is qualified to and has previously produced such textured paving and can comply with the provisions specified herein. The contractor shall also stipulate that he or she will not infringe on any applicable patent rights and will hold the City harmless from any damages arising from patent infringement.

2.) The contractor shall submit a sample of the specified stamped concrete a minimum of 4 s.f. by 3 inches or shall indicate two locations where their prior work of similar stamped concrete can be observed. The samples shall meet the approval of the City Engineer and all work shall match the approved samples.

3.) Concrete work shall conform to the applicable requirements of Sections 200, 201 and 303 of the Standard Specifications for Public Works Construction. Any modification must have prior approval.

4.) Stamped concrete shall be a minimum of 5" thick.
Concrete mix shall be proportioned using 560-C-3250.
An air-entraining agent conforming to ASTM C260 and/or a normal set or retarded-set water reducing admixture conforming with ASTM C494 may be used. Calcium chloride will not be allowed. The slump shall not exceed 4".

5.) The coloring mixture for the stamped concrete shall be integrally mixed.

6.) The coloring mixture for the stamped concrete shall be "brick red" No. 160, by Davis Colors. matching the City Engineer's selected and approved sample pattern. A translucent curing compound shall be applied uniformly to the concrete immediately after finishing.

7.) The contractor shall deliver to the City Engineer two labels from the packages containing the selected coloring agent used in the course of the specified work.

8.) The contractor shall be responsible for adjusting existing City electrical and irrigation valve boxes in all new concrete and for protecting existing irrigation systems from damage.

REVISION			
DATE	APPROVED	ENGINEERING DATE 07/09	CITY OF LAKE ELSINORE
		APPROVED BY	PREPARED BY PUBLIC WORKS
		CITY ENGINEER — DATE 08/31/2009	GENERAL NOTES: STAMPED CONCRETE — NO. 224

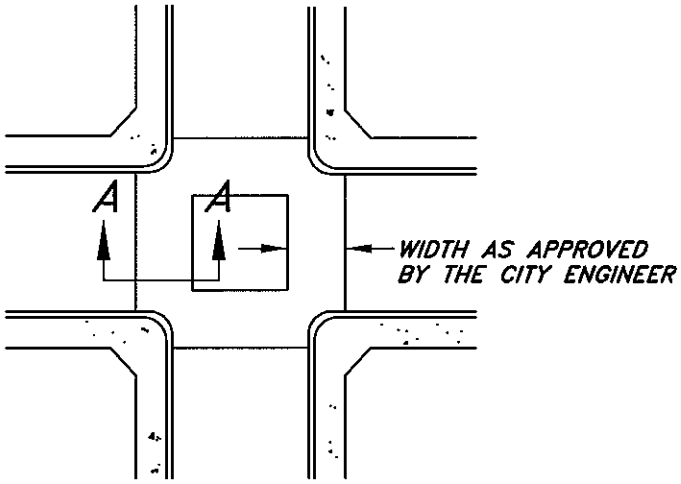

TYPICAL CROSSWALK

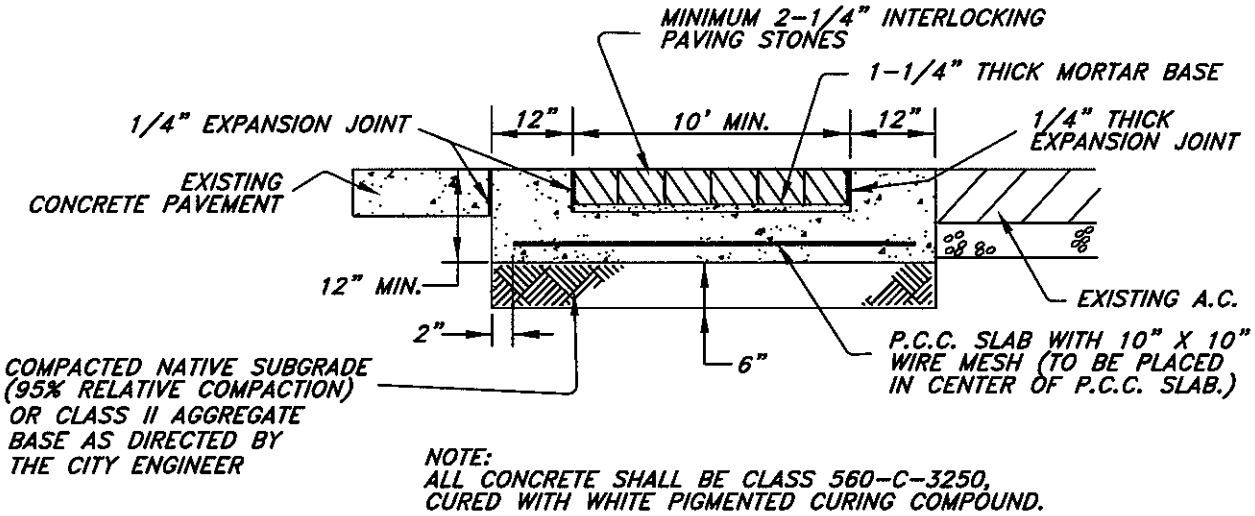

NOTE:
ALL CONCRETE SHALL BE CLASS 560-C-3250,
CURED WITH WHITE PIGMENTED CURING COMPOUND.

SECTION "A-A"

CROSSWALK ENHANCEMENT ALLOWED ONLY WITH THE APPROVAL
OF THE CITY ENGINEER.

REVISION DATE	REVISION APPROVED	ENGINEERING	DATE 07/09	CITY OF LAKE ELSINORE PREPARED BY PUBLIC WORKS	
		APPROVED BY CITY ENGINEER	08/31/2009 DATE	CROSSWALK ENHANCEMENT	NO. 225

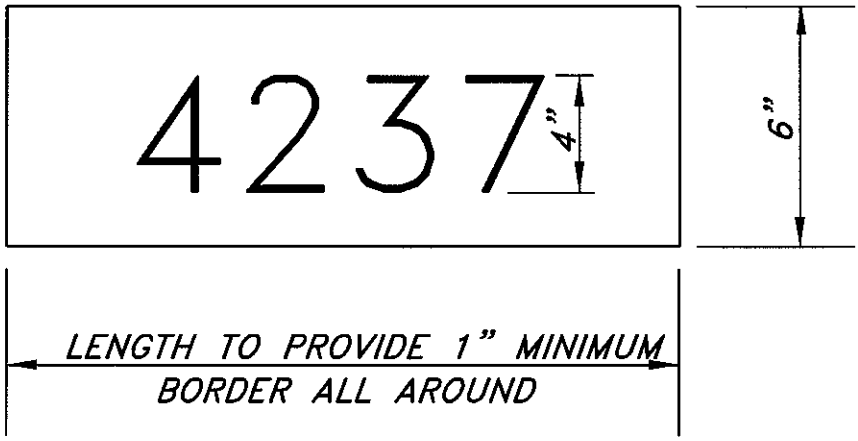

1.) BACKGROUND SHALL BE PAINTED WITH GOOD QUALITY HIGH GLOSS REFLECTIVE WHITE PAINT.

2.) NUMBERS SHALL BE PAINTED WITH GOOD QUALITY FLAT BLACK PAINT.

REVISION				
DATE	APPROVED	ENGINEERING	DATE 07/09	CITY OF LAKE ELSINORE PREPARED BY PUBLIC WORKS
		APPROVED BY CITY ENGINEER	08/31/2009 DATE	CURB PAINTING
				1 OF 2 NO. 226A

CURB PAINTING NOTES

1) A CITY BUSINESS LISCENSE & AN ENCROACHMENT PERMIT SHALL BE REQUIRED.

2) THE CITY SHALL BE CONTACTED AT LEAST ONCE EACH WEEK TO RECEIVE NOTICE OF COMPLAINTS SO THAT THEY MAY BE RECTIFIED IN A TIMELY FASHION.

3) A CASH BOND SHALL BE POSTED WITH THE CITY FOR EACH AND EVERY INDIVIDUAL WHO WILL BE INVOLVED IN THE PAINTING OR SOLICITATION OF ORDERS FOR PAINTING TO INSURE THAT ALL VALID COMPLAINTS ARE RECTIFIED PROMPTLY. THIS DEPOSIT WILL BE REFUNDED WITHIN 30 DAYS AFTER SATISFACTORY COMPLETION OF THE LETTERING.

4) NO NUMBER SHALL BE PAINTED UNTIL AN ORDER IS RECEIVED FROM THE OCCUPANT AND/OR OWNER.

5) A RECEIPT SHALL BE ISSUED TO THE OCCUPANT FOR EACH ADDRESS SO PAINTED.

6) THERE WILL BE NO ORDERS REQUESTED BEFORE 9:00 A.M. OR AFTER 8:00 P.M. OR ANY TIME SUNDAY.

7) ANY WRITTEN DOCUMENTS INTENDED TO BE USED WITH THE SOLICITATION SHALL BE SUBMITTED TO THE CITY FOR PRIOR WRITTEN AUTHORIZATION TO USE THEM.

8) ANY VALID COMPLAINT REGARDING COERCION TO PURCHASE THE CURB NUMBERING IN ANY MANNER SHALL RESULT IN THE TERMINATION OF THE PERMIT AND THE FORFEITURE OF THE BOND.

9) UNLESS A CHANGE IS REQUESTED BY A PURCHASER, THE NUMBER SHALL BE IN THE IDENTICAL LOCATION WITH THE PREVIOUSLY PRINTED NUMBER. IF A LOCATION IS REQUESTED TO BE CHANGED, THE OLD NUMBER SHALL BE OBLITERATED AT NO EXTRA CHARGE.

10) ALL WORK SHALL BE DIRECTLY SUPERVISED BY AN ADULT AND SHALL BE DONE IN A WORKMANLIKE MANNER.

11) A LIST OF THOSE NUMBERS PAINTED SHALL BE SUBMITTED TO THE CITY AT THE COMPLETION OF WORK IN ORDER TO ALLOW FOR THE REFUND OF THE CASH DEPOSIT.

12) A COPY OF THE PERMIT ISSUED BY THE CITY SHALL BE IN THE POSSESSION OF THE INDIVIDUAL AUTHORIZED TO DO CURB LETTERING AT ALL TIMES WHILE ACTUALLY ENGAGED IN SUCH ACTIVITY.

13) PERMITTEE IS RESPONSIBLE FOR MAINTAINING A SAFE WORK AREA AND SHALL TAKE ALL NECESSARY SAFETY PRECAUTIONS.

REVISION		ENGINEERING	DATE 07/09	CITY OF LAKE ELSINORE	
DATE	APPROVED	APPROVED BY		PREPARED BY PUBLIC WORKS	
		CITY ENGINEER	08/31/2009 DATE	CURB PAINTING NOTES	2 OF 2 NO. 226B